Polo 1995 ➤

Running gear self-diagnosis for ABS

Edition 10.1999

Protected by copyright. Copying for private or commercial purposes, in part or in whole, is not permitted unless authorised by Volkswagen AG. Volkswagen AG does not guarantee or accept any liability with respect to the correctness of information in this document. Copyright by Volkswagen AG.

satelettronica

List of Workshop Manual Repair GroupsList of Workshop Manual Repair GroupsList of Workshop Manual Repair Groups

Polo 1995 ➤

Running gear self-diagnosis for ABS

Protected by copyright. Copyright by Volkswagen AG. Volkswagen AG does not guarantee or accept any liability with respect to the correctness of information in this document. Copying for private or commercial purposes, in part or in whole, is not permitted unless authorised by Volkswagen AG.

Repair Group

01 - Self-diagnosis

satelettronica

Technical information should always be available to the foremen and mechanics, because their careful and constant adherence to the instructions is essential to ensure vehicle road-worthiness and safety. In addition, the normal basic safety precautions for working on motor vehicles must, as a matter of course, be observed.

All rights reserved.
No reproduction without prior agreement from publisher.

Copyright © 2010 Volkswagen AG, Wolfsburg

Contents

01 - Self-diagnosis 1
1 Self-diagnosis function, ITT Mark 04 GI 1
1.1 Self-diagnosis function, ITT Mark 04 GI 1
1.2 Function 1
1.3 Arrangement of ABS ITT Mark 04 GI 2
1.4 Technical data of self-diagnosis 2
1.5 Safety precautions and fundamental points regarding fault finding 3
1.6 Fault finding with fault reader V.A.G 1551 or tester VAS 5051 on ABS, ITT Mark 04 GI (flow chart) 3
2 Electrical/electronic components and fitting locations 5
2.1 Electrical/electronic components and fitting locations 5
3 Faults displayed by warning lamps K47 and K118 10
3.1 Faults displayed by warning lamps K47 and K118 10
4 Performing self diagnosis 11
4.1 Performing self diagnosis 11
4.2 Test prerequisites for self-diagnosis 11
4.3 Safety precautions 11
4.4 Connecting fault reader V.A.G 1551 and selecting functions 11
4.5 Connecting Vehicle Diagnosis, Testing and Information System VAS 5051 and selecting ABS control unit 14
4.6 List of selectable functions 15
4.7 Interrogating fault memory 15
4.8 Automatic test sequence 16
4.9 Fault table 16
4.10 Erasing fault memory, ending output 22
4.11 Coding control unit 23
4.12 Read measured value block 24
4.13 Final control diagnosis 27
5 Electrical check of ABS ITT Mark 04 GI 34
5.1 Electrical check of ABS ITT Mark 04 GI 34
5.2 Test prerequisites 35
5.3 Multi-pin connector with contact assignment 36
5.4 Test table 38
6 Self-diagnosis function ITT Mark 20 GI and ITT Mark 20 IE 44
6.1 Self-diagnosis function ITT Mark 20 GI and ITT Mark 20 IE 44
6.2 Function 44
6.3 Distinguishing features of ABS ITT Mark 20 GI / ITT Mark 20IE and ABS/EDL ITT Mark 20 GI / ITT Mark 20 IE 45
6.4 Technical data of self-diagnosis 47
6.5 Safety precautions and fundamental points regarding fault finding 47
6.6 Fault finding with fault reader V.A.G 1551 or tester VAS 5051 on ABS and ABS/EDL ITT Mark 20 GI and ITT Mark 20 IE (flow chart) 48
7 Electrical/electronic components and fitting locations 49
7.1 Electrical/electronic components and fitting locations 49
8 Faults displayed by warning lamps K47 and K118 57
8.1 Faults displayed by warning lamps K47 and K118 57
9 Performing self diagnosis 59
9.1 Performing self diagnosis 59
9.2 Test prerequisites for self-diagnosis 59
9.3 Safety precautions 60
9.4 Connecting fault reader V.A.G 1551 and selecting function 60
9.5 Connecting Vehicle Diagnosis, Testing and Information System VAS 5051 and selecting engine electronics control unit 63

Protected by copyright. Copying for private or commercial purposes, in part or in whole, is not permitted unless authorised by Volkswagen AG. Volkswagen AG does not guarantee or accept any liability with respect to the correctness of information in this document. Copyright by Volkswagen AG.
satelettronica

9.6 List of selectable functions . . . 64
9.7 Interrogating fault memory . . . 64
9.8 Fault table . . . 65
9.9 Erasing fault memory, ending output . . . 71
9.10 Coding control unit . . . 72
9.11 Read measured value block . . . 73
9.12 Initiating basic setting . . . 76

10 Electrical check of ABS, ABS/EDL ITT Mark 20 GI and ITT Mark 20 IE . . . 81
10.1 Electrical check of ABS, ABS/EDL ITT Mark 20 GI and ITT Mark 20 IE . . . 81
10.2 Test prerequisites . . . 82
10.3 Multi-pin connector with contact assignment . . . 83
10.4 Test table . . . 84

11 ITT Mark 30 IE self-diagnosis function . . . 91
11.1 ITT Mark 30 IE self-diagnosis function . . . 91
11.2 Function . . . 91
11.3 Distinguishing features of ABS ITT Mark 30 IE . . . 92
11.4 Technical data of self-diagnosis . . . 93
11.5 Safety precautions and fundamental points regarding fault finding . . . 93
11.6 Fault finding with fault reader V.A.G 1551 or with tester VAS 5051 on ABS, ITT Mark 30 IE (flow chart) . . . 94

12 Electrical/electronic components and fitting locations . . . 95
12.1 Electrical/electronic components and fitting locations . . . 95

13 Faults displayed by warning lamps K47 and K118 . . . 100
13.1 Faults displayed by warning lamps K47 and K118 . . . 100

14 Performing self diagnosis . . . 101
14.1 Performing self diagnosis . . . 101
14.2 Test prerequisites for self-diagnosis . . . 101
14.3 Safety precautions . . . 101
14.4 Connecting fault reader V.A.G 1551 and selecting function . . . 101
14.5 Connecting Vehicle Diagnosis, Testing and Information System VAS 5051 and selecting engine electronics control unit . . . 104
14.6 List of selectable functions . . . 105
14.7 Interrogating fault memory . . . 105
14.8 Fault table . . . 106
14.9 Erasing fault memory, ending output . . . 112
14.10 Coding control unit . . . 113
14.11 Read measured value block . . . 115

15 Electrical check of ABS ITT Mark 30 IE . . . 119
15.1 Electrical check of ABS ITT Mark 30 IE . . . 119
15.2 Test prerequisites . . . 120
15.3 Multi-pin connector with contact assignment . . . 121
15.4 Test table . . . 123

16 Function of self-diagnosis, ABS/EDL/TCS/ESP ITT Mark 20 IE . . . 130
16.1 Function of self-diagnosis, ABS/EDL/TCS/ESP ITT Mark 20 IE . . . 130
16.2 Function . . . 130
16.3 Allocation of ABS/EDL/TCS/ESP ITT MARK 20 IE . . . 131
16.4 Self-diagnosis technical data . . . 132
16.5 Safety precautions and fundamental points regarding fault finding . . . 132
16.6 Fault finding with fault reader V.A.G 1551 or tester VAS 5051 on ABS/EDL/TCS/ESP ITT Mark 20 IE (flow chart) . . . 133

17 Electrical/electronic components and fitting locations . . . 134
17.1 Electrical/electronic components and fitting locations . . . 134

18 Faults displayed by warning lamps K 47, K118 and K155 . . . 145
18.1 Faults displayed by warning lamps K 47, K118 and K155 . . . 145

19 Performing self diagnosis . . . 147
19.1 Performing self diagnosis . . . 147

Protected by copyright. Copyright by Volkswagen AG.
Volkswagen AG. Volkswagen AG does not guarantee or accept any liability with respect to the correctness of information in this document.
Copyright by Volkswagen AG. Reproduction or publication in part or whole is not permitted without authorisation.
satelettronica

19.2 Test prerequisites for self-diagnosis 147
19.3 Safety precautions 147
19.4 Connecting fault reader V.A.G 1551 and selecting function 147
19.5 Connecting Vehicle Diagnosis, Testing and Information System VAS 5051 and selecting ABS control unit 150
19.6 List of selectable functions 150
19.7 Interrogating fault memory 151
19.8 Fault table 152
19.9 Erasing fault memory, ending output 163
19.10 Coding control unit 164
19.11 Read measured value block 165
19.12 Initiating basic setting 171
19.13 Login procedure 177

20 Electrical check of ABS/EDL/TCS/ESP ITT Mark 20 IE 179
20.1 Electrical check of ABS/EDL/TCS/ESP ITT Mark 20 IE 179
20.2 Test prerequisites 179
20.3 Multi-pin connector with contact assignment 180
20.4 Test table (test steps 1 - 16) 183
20.5 Test table (test steps 17 - 28) 190

21 Definitions 199
21.1 Definitions 199

Protected by copyright. Copying for private or commercial purposes, in part or in whole, is not permitted unless authorised by Volkswagen AG. Volkswagen AG does not guarantee or accept any liability with respect to the correctness of information in this document. Copyright by Volkswagen AG.

satelettronica

Protected by copyright. Copying for private or commercial purposes, in part or in whole, is not permitted unless authorised by Volkswagen AG. Volkswagen AG does not guarantee or accept any liability with respect to the correctness of information in this document. Copyright by Volkswagen AG.

satelettronica

01 - Self-diagnosis

1 - Self-diagnosis function, ITT Mark 04 GI

1.1 - Self-diagnosis function, ITT Mark 04 GI

1.2 - Function

The ABS designation has been changed:

Previously: Teves 20 GI

New: ITT Mark 20 GI

The work sequence and function has not changed because of the new designation. Both ABS systems are identical.

The self-diagnosis relates to the electrical/electronic part of the ABS, in other words only faults via the electrical connection to the control unit are recognised (e.g. speed sensor open circuit).

The 25 pin ABS control unit -J104- forms with the hydraulic unit a compact unit. The unit is located on the left of the engine compartment. The control unit is equipped with a fault memory. The diagnostic connections are located behind driver's stowage box.

The control unit recognises faults and malfunctions during vehicle operation and stores them in a permanent memory, the contents of which remain despite the lack of battery voltage.

Sporadic (isolated) faults will also be recognised and stored. But if these faults do not occur again within the next 50 vehicle starts and driving off sequences then with the exception of "control unit defective", the fault memory will be erased (forget fault counter).

After switching on the ignition and/or starting the engine the ABS warning lamp -K47- lights up for approx. 2 seconds.

During this period a test sequence (self-check) is run in the control unit for the following functions:

- To check if the supply voltage is at least 10.0 Volt,
- To check control unit including the valve windings,
- To check the coding of the control unit,
- A static check of the speed sensor (no speed signal),
- If after driving off and exceeding a speed of approx. 20 km/h (approx. 13 mph) the speed signal is not OK. the ABS warning lamp -K47- will light up again.

Fault reader V.A.G 1551 or tester VAS 5051

The self-diagnosis must be initiated at the commencement of fault finding. Electrical faults which influence the braking characteristics will be stored. They can be interrogated either with the fault reader V.A.G 1551 or with the tester VAS 5051.

The fault information displayed is used in conjunction with a fault table which has information on the possible fault causes for pin-pointed repair measures.

Protected by copyright. Copying for private or commercial purposes, in part or in whole, is not permitted unless authorised by Volkswagen AG. Volkswagen AG does not guarantee or accept any liability with respect to the correctness of information in this document. Copyright by Volkswagen AG.
satelettronica

1.3 - Arrangement of ABS ITT Mark 04 GI

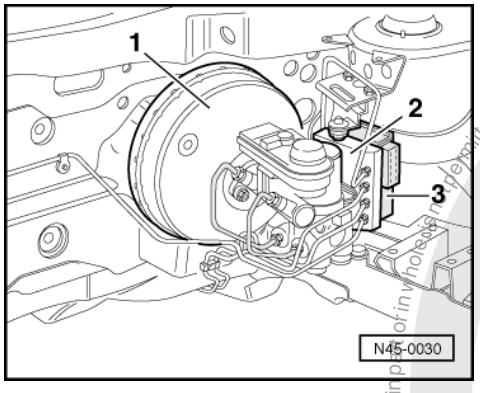

ABS - ITT Mark 04 GI / LHD

The brake servo boost is produced by vacuum pressure.

-> Distinguishing features:

1- 9" brake servo
2- Hydraulic unit
3- Control unit, 25 pin (bolted to hydraulic unit)

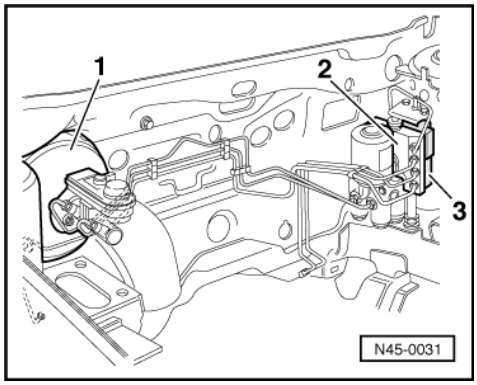

ABS - ITT Mark 04 GI / RHD

The brake servo boost is produced by vacuum pressure.

-> Distinguishing features:

1- 8" brake servo
2- Hydraulic unit
3- Control unit, 25 pin (bolted to hydraulic unit)

1.4 - Technical data of self-diagnosis

Control unit identification

The control unit version is displayed once the fault reader V.A.G 1551 or the tester VAS 5051 has been connected and the control unit for brake electronics has been selected => Page 11 .

6NO 907 379

Protected by copyright. Copyright by Volkswagen AG.
Copying for private or commercial purposes, in part or in whole, is not permitted unless authorised by Volkswagen AG. Volkswagen AG does not guarantee or accept any liability with respect to the correctness of information in this document.
satelettronica

7MO 907 379

Fault memory

Permanent memory (fault memory) contents remain even without a supply voltage.

Data output takes place on fault reader V.A.G 1551 in operating mode 1 (rapid data transfer), and on tester VAS 5051 in operating mode "vehicle self-diagnosis".

1.5 - Safety precautions and fundamental points regarding fault finding

- The ABS is a vehicle safety system; the appropriate knowledge is necessary to work on the system.
- In order to check complaints and to be able to carry out pin-pointed fault finding, the fault memory must be interrogated before commencing work on the ABS system.
- Only separate connectors when the ignition is switched off.
- Observe the appropriate instructions regarding the handling of brake fluid.

=> Brake system; Repair group 47

=> Special Information, Running gear No. 21

- ABS faults are indicated by the ABS warning lamp lighting up; certain faults will only recognised at speeds above 20 km/h (approx. 13 mph) (carry out road test).
- If the ABS -K47- and the brake system -K118- warning lamps do not light up, but the brake system is not functioning correctly then the fault must be sought in the conventional braking system.
- Information on eliminating current defects

=> Technical Service Handbook.

Necessary technical information

Current flow diagrams, Electrical fault finding and Fitting locations binder
Workshop Manual Polo 1995 ‣ Brake systems
Workshop Manual Polo 1995 ‣ Running gear, axles, steering
Technical service handbook

1.6 - Fault finding with fault reader V.A.G 1551 or tester VAS 5051 on ABS, ITT Mark 04 GI (flow chart)

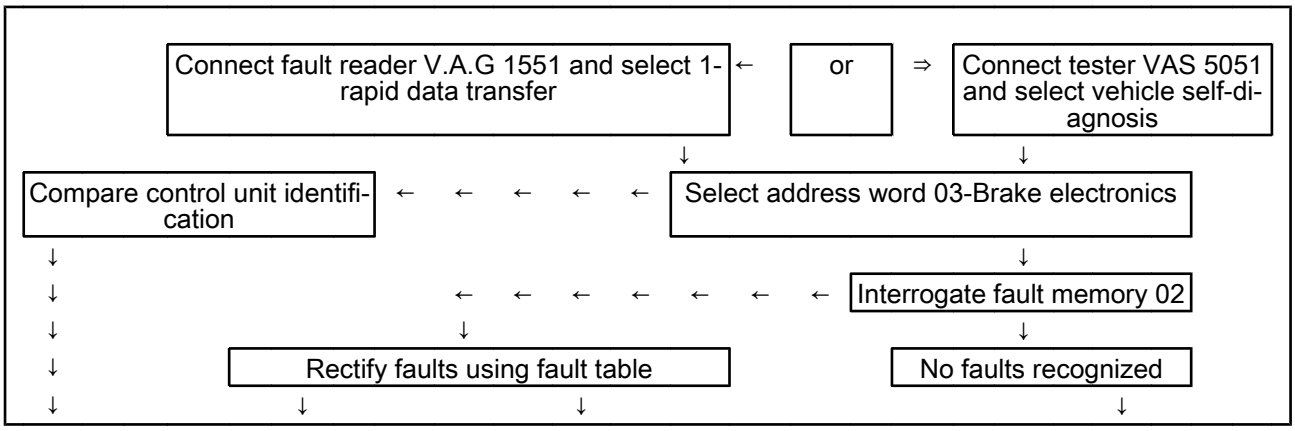

Protected by copyright. Copyright by Volkswagen AG. Not permitted unless authorised by Volkswagen AG. Volkswagen AG does not guarantee or accept any liability with respect to the correctness of information in this document. Copyright by Volkswagen AG.
satelettronica

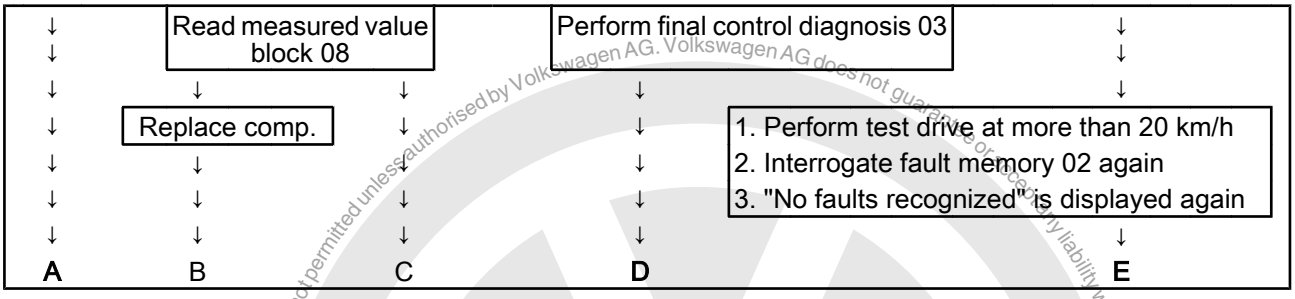

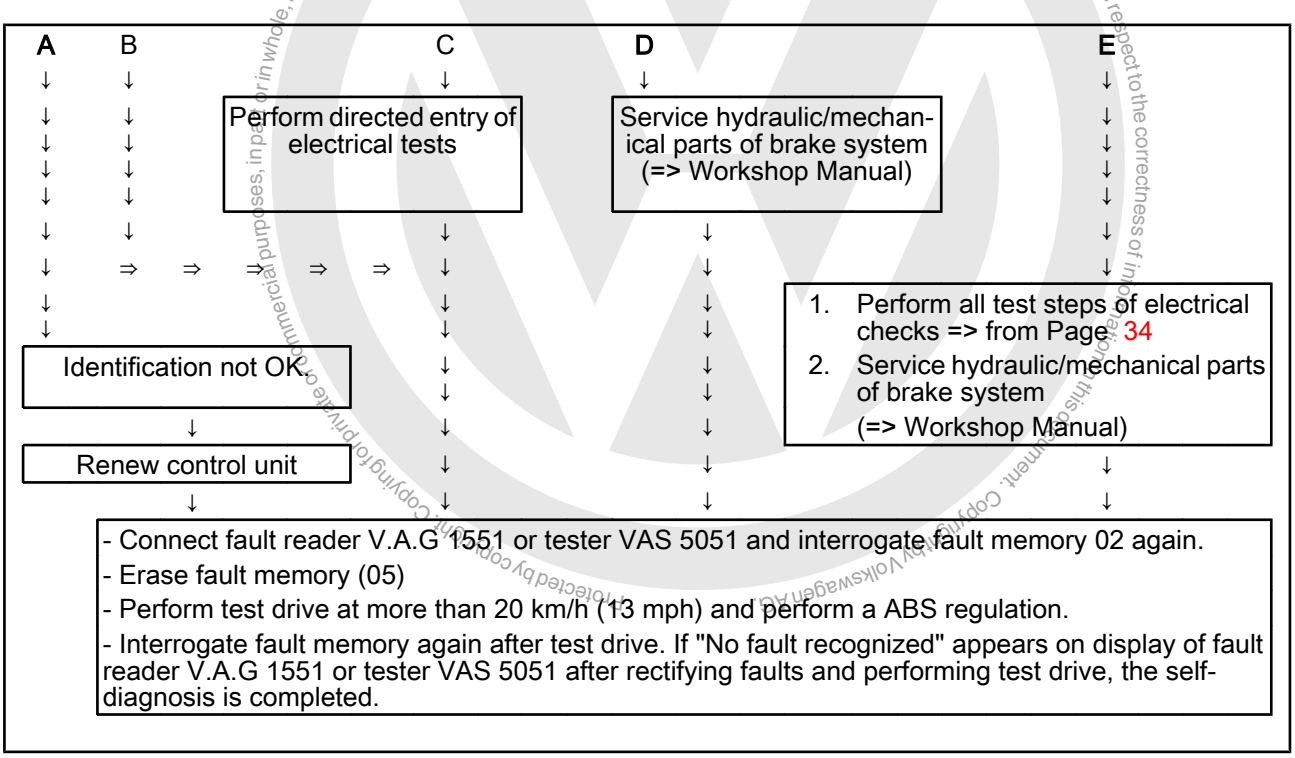

Protected by copyright. Copying for private or commercial purposes, in part or in whole, is not permitted unless authorised by Volkswagen AG. Volkswagen AG does not guarantee or accept any liability with respect to the correctness of information in this document. Copyright by Volkswagen AG.

satelettronica

2 - Electrical/electronic components and fitting locations

2.1 - Electrical/electronic components and fitting locations

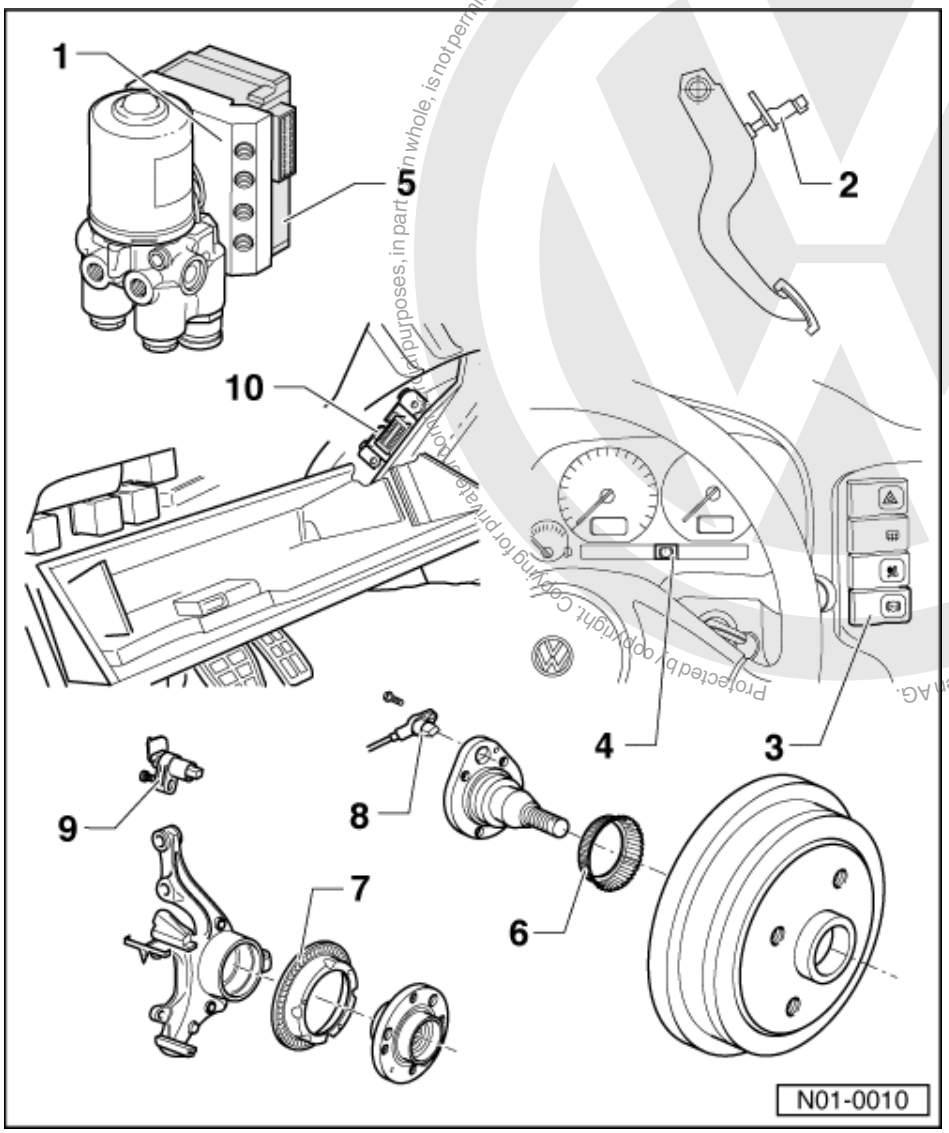

1 ABS hydraulic unit -N55

- Located on left of engine compartment.
- The hydraulic pump -V64- and the inlet/outlet valves in the hydraulic unit are checked by self-diagnosis
- The hydraulic pump -V64- and valve block must not be separated from one another
- Removing and installing

=> Brake systems; Repair group 45

- When changing the hydraulic unit, always seal the old part with the plugs from the repair set Part No. 1H0 698 311 A

satelettronica

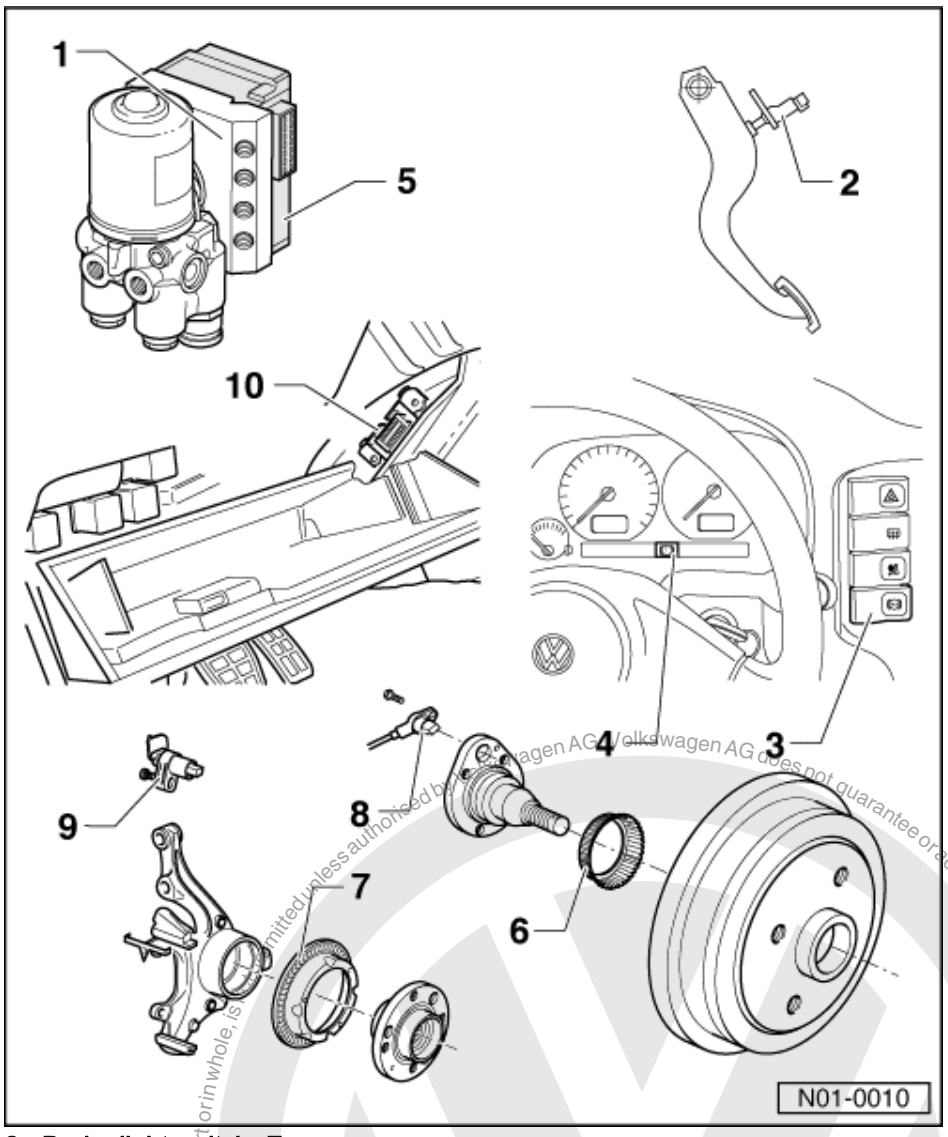

2 Brake light switch -F

- The brake light switch is open in the rest position;
- Can be checked via reading measured value block => page 24
- Adjusting

=> Brake system; Repair group 46; Brake pedal - Assembly overview; Adjusting brake light switch Brake pedal - Assembly overview Adjusting brake light switch

3 ABS warning lamp -K47

Locations:

- LHD, on right of dash panel insert
- RHD, on left of dash panel insert

Function: =>Page 10

4 Brake system warning lamp -K118

- Location: In the dash panel insert

Function: =>Page 10

Protected by copyright. Copyright by Volkswagen AG.
Volkswagen AG does not guarantee or accept any liability with respect to the correctness of information in this document.
Copyright by Volkswagen AG, is prohibited unless authorised by Volkswagen AG. Sold or transmitted in whole or in part or in any form or by any means for any purpose.
satelettronica

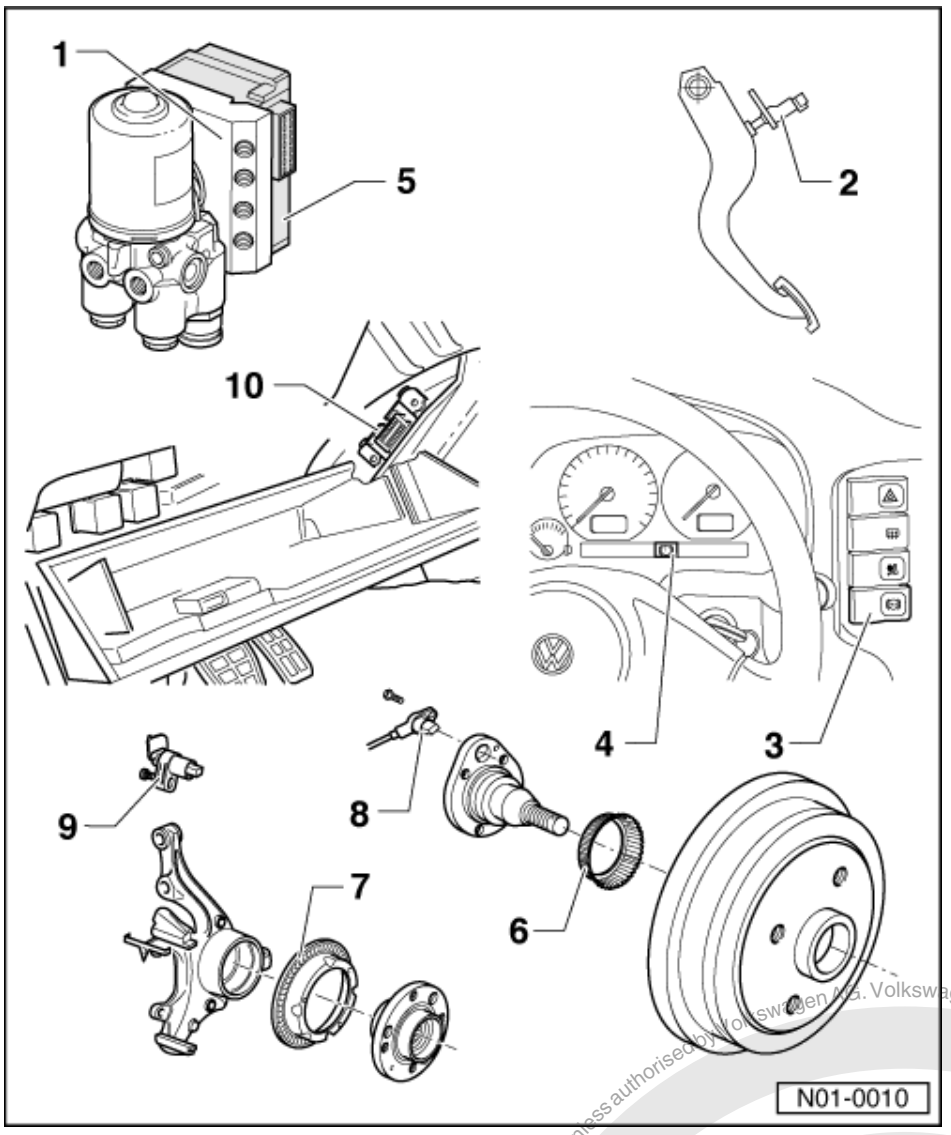

5 ABS control unit -J104

- Location: on hydraulic unit on left of engine compartment
- Checking multi-pin connector to control unit =>Page 36
- Do not disconnect connector before successfully completing self-diagnosis. Switch ignition off before separating connection.

6 Rotor for speed sensor

- Rotor and speed senders for rear left and right-hand sides are identical
- Removing and installing

=> Running gear, axles, steering; Repair group Gr. 42; Servicing wheel bearings

satelettronica
Protected by copyright. Copying for private or commercial purposes, in part or in whole, is not permitted unless authorised by Volkswagen AG. Volkswagen AG does not guarantee or accept any liability with respect to the correctness of information in this document. Copyright by Volkswagen AG.

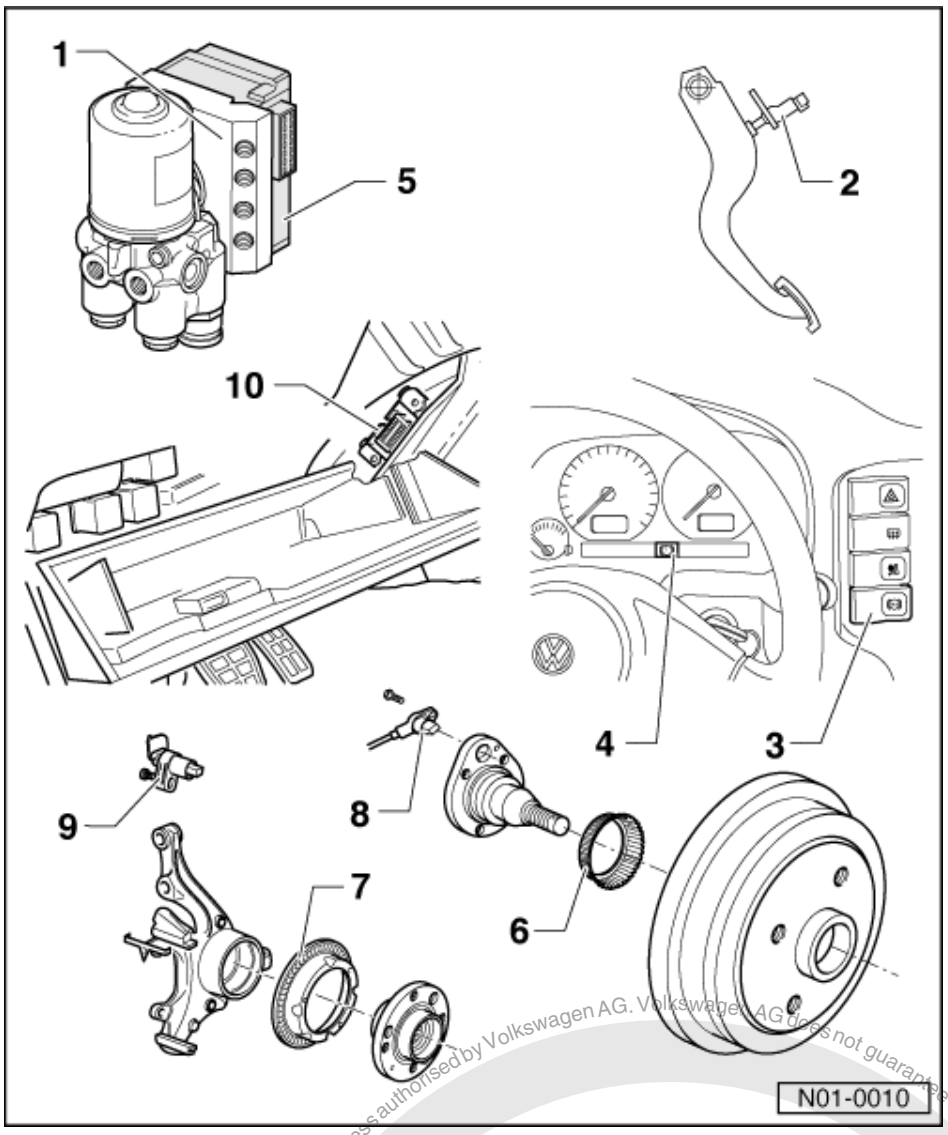

7 Rotor for speed sensor

- Rotor and speed senders for front left and right-hand sides are identical
- Removing and installing

=> Running gear, Axles, Steering; Repair group 40; Servicing front suspension Servicing front suspension

8 Rear right/left speed sensor -G44-/-G46

- Before inserting the sensor clean the inner surface of the sensor mounting and coat with lubricating paste G 000 650
- When connecting the speed sensor wire ensure it is not twisted in the wheel housing
- Securing bolt tightening torque
  - 10 Nm

Protected by copyright. Copying for private or commercial purposes, in part or in whole, is not permitted unless authorised by Volkswagen AG. Volkswagen AG does not guarantee or accept any liability with respect to the correctness of information in this document. Copyright by Volkswagen AG.
satelettronica

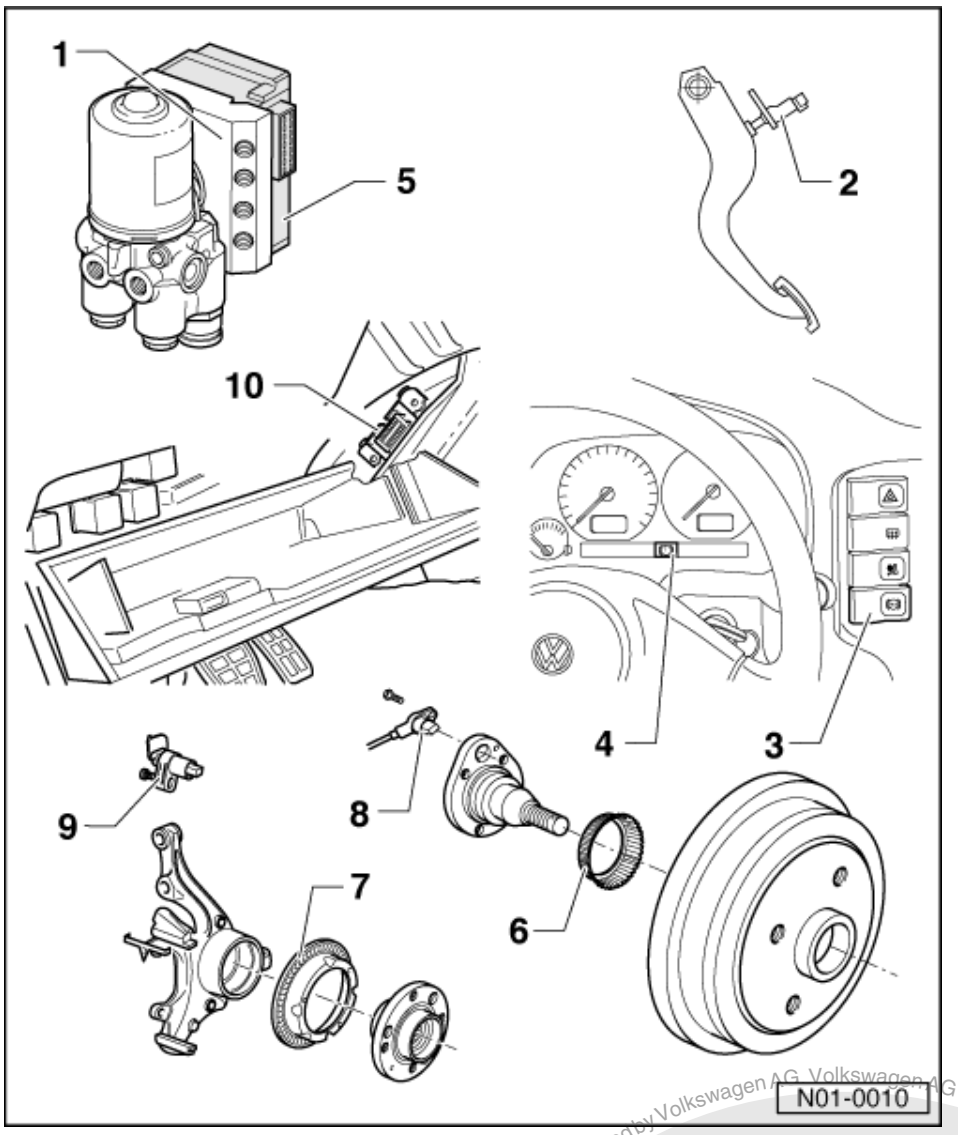

9 Front right/left speed sensor -G45-/-G47

- Before inserting the sensor clean the inner surface of the sensor mounting and coat with lubricating paste G 000 650
- When connecting the speed sensor wire ensure it is not twisted in the wheel housing
- Securing bolt tightening torque
  - 10 Nm

10 Diagnostic connections

- Location: Behind driver's side stowage compartment

satelettronica
Protected by copyright. Copying for private or commercial purposes, in part or in whole is not permitted unless authorised by Volkswagen AG. Volkswagen AG does not guarantee or accept any liability with respect to the correctness of information in this document. Copyright by Volkswagen AG.

3 - Faults displayed by warning lamps K47 and K118

3.1 - Faults displayed by warning lamps K47 and K118

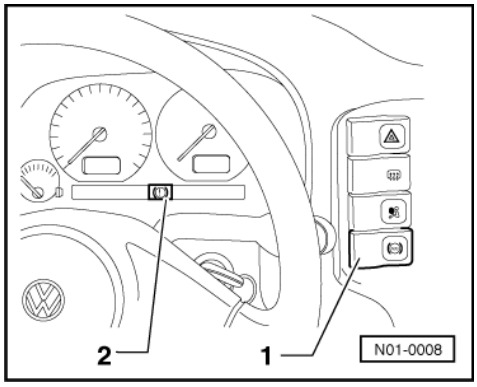

-> Warning lamps

Item	Designation
1	ABS warning lamp -K47
2	Brake system warning lamp -K118

Warning lamp K47

- If the ABS warning lamp -K47- -1- does not go out after ignition is switched on and test sequence is completed, then the fault may be:

  -a- Voltage supply is below 10 Volt
  -b- There is a fault in the ABS
  The anti-locking brake system remains switched off with an ABS fault -b-, but the brake system remains fully operational.
  -c- Since the last time the vehicle was started there was a temporary speed sensor fault.
  In the case of a sensor fault -c-, the ABS warning lamp -K47- will extinguish after restarting the engine and attaining a speed of above 20 km/h (approx. 13 mph).

Warning lamps K47 and K118

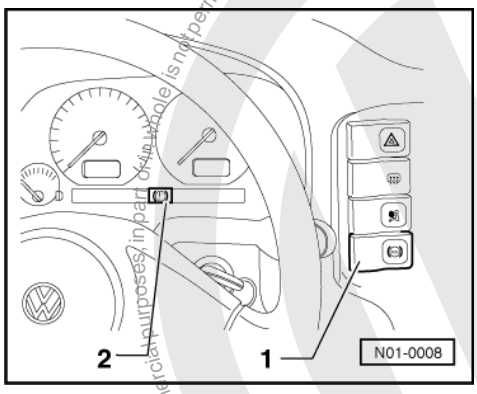

- -> If the ABS warning lamp -K47- -1- goes out but the brake system warning lamp -K118- -2- remains on, then the fault may be:

  -a- The handbrake is applied..
  -b- There is a fault in the activation of the brake system warning lamp -K118.

=> Current flow diagrams, Electrical fault finding and Fitting locations binder

  -c- The brake fluid level is too low.

satelettronica

- If the ABS warning lamp -K47- -1- and the brake system warning lamp -K118- -2- light up, the ABS system is defective and the EBD (Electronic brake pressure distribution) is not functioning.

Warning!
After the ABS warning lamp -K47- and brake system warning lamp -K118- have lit up, it is possible that the rear wheels will lock-up earlier.

4 - Performing self diagnosis

4.1 - Performing self diagnosis

4.2 - Test prerequisites for self-diagnosis

- The tyres fitted to all wheels must be of the same (approved) size; tyres inflated to prescribed pressure.
- Mechanical/hydraulic parts of the brake system including brake light switch and brake lights OK.
- Hydraulic pipes and connections not leaking (visual check of hydraulic unit, brake calipers, wheel cylinders, tandem master brake cylinder).
- Wheel bearings and wheel bearing play OK.
- Control unit -J104- is correctly bolted to hydraulic unit -N55.
- Connector on control unit -J104- correctly plugged-in (retainer is engaged).
- Check contacts of ABS components for damage and correct seating.
- All fuses according to current flow diagram OK (remove fuse from fuse holder to check).
- Supply voltage OK (at least 10.0 V).

4.3 - Safety precautions

Observe following if test and measuring instruments are required during a test drive:

- Test and measuring instruments must be secured to rear seat and operated by a 2nd person from this location.
- When test and measuring instruments are operated from the front passenger seat there is a danger that the person sitting there could be injured in an accident when the airbag is triggered.

4.4 - Connecting fault reader V.A.G 1551 and selecting functions

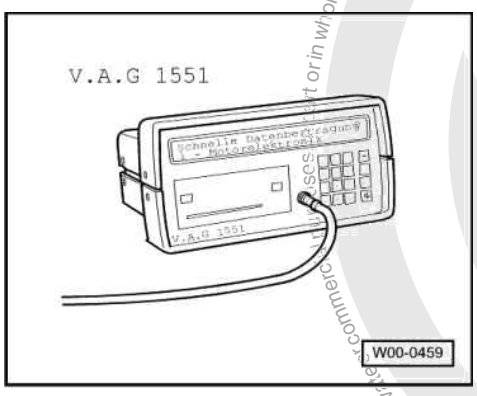

All functions which could previously be performed with V.A.G 1551 can also be performed with the new tester VAS 5051 in the operating mode "vehicle self-diagnosis":

Protected by copyright. Copyright by Volkswagen AG.
Unauthorised use or commercial or private use is not permitted without the express authorisation of Volkswagen AG. Volkswagen AG does not guarantee or accept any liability with respect to the correctness of information in this document.
satelettronica

Special tools and workshop equipment required

- V.A.G 1551 Fault reader or V.A.G 1552 vehicle system tester.

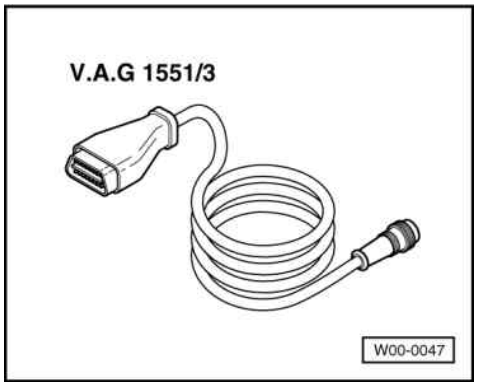

- V.A.G 1551/3 or 1551/3A Adapter cable

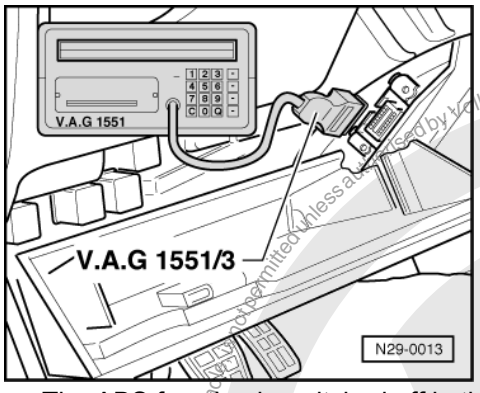

- The ABS function is switched off in the control unit during the self diagnosis.
- The fault memory can be erased after successful interrogation and repair.

- -> Open driver's side stowage compartment.
- With ignition switched off connect V.A.G 1551 using cable V.A.G 1551/3(A) to diagnostic socket.
- Connecting VAS 5051 => Page 14 .

-> Indicated on display:

```
V.A.G - SELF-DIAGNOSIS      HELP
1 - Rapid data transfer1)
2 - Flash code output1)
```

1) Is displayed alternately

If the display remains blank, check self diagnosis connector, Electrical check, =>Page 34 .

- Depending on the programme, additional operating information can be printed out by pressing the HELP key of V.A.G 1551.
- The ⇒key is used for moving forward within the programme
- The PRINT key is used for switching on the printer (warning lamp in key comes on).

- Switch on ignition.
- Switch on printer with the Print key (indicator lamp in key lights up).
- Press key -1- for "Rapid data transfer" operating mode.

-> Indicated on display:

```
Rapid data transfer       HELP
Enter address word XX
```

- Press keys -0- and -3-; 03 inputs the address word of the vehicle system to be tested "Brake electronics".

Protected by copyright. Copying for private or commercial purposes, in part or in whole, is not permitted unless authorised by Volkswagen AG. Volkswagen AG does not guarantee or accept any liability with respect to the correctness of information in this document. Copyright by Volkswagen AG.
satelettronica

-> Indicated on display:

```
Rapid data transfer      Q
03 - Brake electronics
```

- Confirm input with Q key.

-> and then appears e.g. the display:

```
6N0 907 379     ABS     Teves 04 GI
V00     □
Coding 01901     WSC 00000
```

Displayed is:

- The control unit identification number.

e.g. (6N0 907 379).

Allocation of control unit

=> Parts list

- System designation (ABS Teves 04 GI).

- Actual control unit coding
- Workshop code => V.A.G 1551 fault reader operating instructions

Allocation of control unit

=> Parts list

- Control unit coding (01901).

Coding control unit =>Page 23

- Workshop code

=> Fault reader V.A.G 1551 operating instructions

If the control unit identification number does not appear => Summary of functions Page 15

- Press => key.

-> Indicated on display (select function, e.g. 02 - Interrogate fault memory).

```
Rapid data transfer     HELP
Select function XX
```

-> Indicated on display:

```
Rapid data transfer     HELP
Control unit does not answer!
```

- By pressing the HELP key, a list of possible fault causes is printed out.
- After eliminating the possible causes of faults, enter the address word 03 for "Brake electronics" again and confirm.

If "Control unit does not answer!" again appears:

-> Indicated on display:

```
Rapid data transfer     HELP
Control unit does not answer!
```

- Electrical check, => Page 34 , perform test steps 1, 2 and 3.

-> Control unit identification influenced during interrogation (possibly influenced from external sources?)

Protected by copyright. Copying for private or commercial purposes, in part or in whole, is not permitted unless authorised by Volkswagen AG. Volkswagen AG does not guarantee or accept any liability with respect to the correctness of information in this document. Copyright by Volkswagen AG.

satelettronica

```
Rapid data transfer
No signal from control unit!
```

- Check diagnostic wire as well as voltage supply and earth connection for ABS control unit -J104-, Electrical check, =>Page 34 .
- After rectifying the possible causes of the fault, enter the address word 03 for "Brake electronics" again and confirm with Q key.

4.5 - Connecting Vehicle Diagnosis, Testing and Information System VAS 5051 and selecting ABS control unit

All functions which could previously be performed with V.A.G 1551 can also be performed with the new tester VAS 5051 in the operating mode "vehicle self-diagnosis":

=> Operating instructions for Vehicle Diagnosis, Testing and Information System VAS 5051.

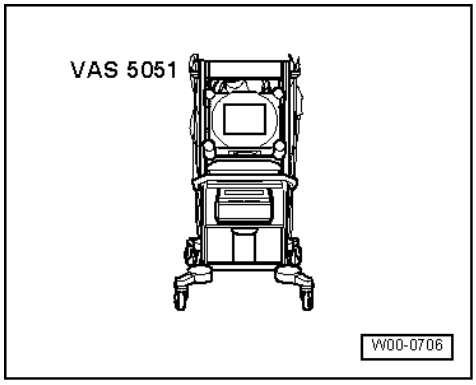

Special tools, workshop equipment, testers, measuring instruments and auxiliary items required

- VAS 5051 Vehicle Diagnosis, Testing and Information System

- The ABS function is switched off in the control unit during the self diagnosis.
- The fault memory can be erased after successful interrogation and repair.

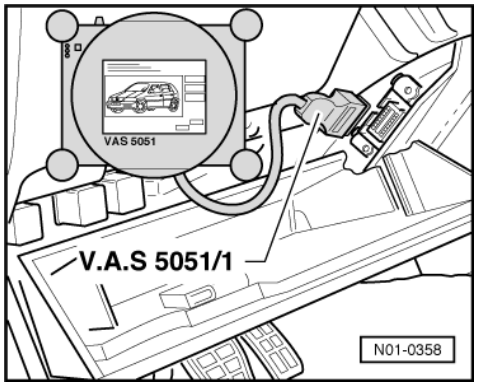

- -> Open driver's side stowage compartment.
- With ignition switched off, connect tester VAS 5051 to diagnosis connection using diagnosis cable VAS 5051/1 or VAS 5051/3.

- In the functions 04 - Basic setting/08 - Read data block, the display zones will be listed from top to bottom.
- If the display does not indicate as described in the work sequence:

=> Operating instructions for Vehicle Diagnosis, Testing and Information System VAS 5051.

Protected by copyright. Copying for private or commercial purposes, in part or in whole, is not permitted unless authorised by Volkswagen AG. Volkswagen AG does not guarantee or accept any liability with respect to the correctness of information in this document. Copyright by Volkswagen AG.
satelettronica

4.6 - List of selectable functions

	Page
00 - Automatic test sequence	16
01 - Interrogate control unit version =>Connecting fault reader V.A.G 1551 and selecting functions	11
01 - Interrogate control unit version => Connecting tester VAS 5051 and selecting ABS control unit	14
02 - Interrogate fault memory	15
03 - Final control diagnosis	27
05 - Erase fault memory	22
06 - End output	22
07 - Code control unit	23
08 - Read measured value block	24

4.7 - Interrogating fault memory

- All functions that have so far been carried out with V.A.G 1551 can now also be carried out with the tester VAS 5051.

-> Indicated on display:

```
Rapid data transfer      HELP
Select function XX
```

- Press keys 0 and 2; 02 enters the "Interrogate fault memory" function.

-> Indicated on display:

```
Rapid data transfer      Q
02 - Interrogate fault memory
```

- Confirm entry with Q key.

-> The number of faults stored or "No fault recognised" will be displayed.

```
X Faults recognised!
```

-> The number of stored faults or "No fault recognised" appears in the display.

```
X Faults recognised!
```

- Press ⇒ key.

  The stored faults are displayed and printed out one after the other.

- Go to the Fault table on Page 16 with the fault information print-out and rectify fault.

  As with "No fault recognised", the programme returns to the start position after pressing the ⇒key:

-> Indicated on display:

```
Rapid data transfer      HELP
Select function XX
```

- End output (Function 06) => Page 22 .
- Switch off ignition and unplug diagnostic connectors.

Work sequence if a fault has been detected:

Protected by copyright. Copying for private or commercial purposes, in part or in whole, is not permitted unless authorised by Volkswagen AG. Volkswagen AG does not guarantee or accept any liability with respect to the correctness of information in this document. Copyright by Volkswagen AG.
satelettronica

1. Rectify fault using fault table, Page 16

2. Interrogate fault memory (Function 02)

3. Erase fault memory (Function 05)

4. End output (Function 06)

5. Perform a test drive

6. Interrogate fault memory again

4.8 - Automatic test sequence

The automatic test sequence interrogates all the fault memories of the control units.

- Switch on ignition.

-> Indicated on display:

```
V.A.G - SELF-DIAGNOSIS    HELP
1 - Rapid data transfer1)
2 - Flash code output1)
```

1) Is displayed alternately

- Press key -1- for "Rapid data transfer" operating mode.
- Switch on printer with the Print key (indicator lamp in key lights up).

-> Indicated on display:

```
Rapid data transfer     HELP
Select function XX
```

- Press key -0- twice; 00 enters the "Interrogate automatic test sequence" function.
- Confirm entry with Q key.

-> In the display of fault reader 1551, the engine control unit identification is displayed first e.g.

```
032906026BI     1.6l     R4     MONO
1.3     D1     TEV
Coding 00002     WSC XXXXX
```

Thereafter all control unit identifications with possible fault memory entries are displayed:

4.9 - Fault table

Notes on fault table

- When commencing fault finding of the vehicle control units, always start with function "Automatic test sequence" by pressing keys 0 and 0. This interrogates the fault memories of the control units in the vehicle.
- All the possible faults which can be recognised by the ABS control unit -J104- and printed-out on V.A.G 1551 or VAS 5051, are listed on the following pages according to the 5 digit fault code.
- Fault code appears (in the "Rapid data transfer" mode) only on the print-out.

Example:	
Fault code 5 digit	Fault type code 3 digit

Protected by copyright. Copyright by Volkswagen AG. Volkswagen AG does not guarantee or accept any liability with respect to the correctness of information in this document. Copyright by Volkswagen AG. Reproduced for private or commercial purposes, in part or in whole, is not permitted unless authorised by Volkswagen AG.
satelettronica

Example:	
00283	035

- The 3 digit fault type code is a data code and may be disregarded, but the fault type text is of use.
- Before replacing components indicated as being faulty, check all the appropriate connectors, wiring and earth connections using the current flow diagram =>Current flow diagrams, Electrical fault finding and Fitting locations binder.
- On completion of repairs always interrogate the fault memory with fault reader V.A.G 1551 or the new tester VAS 5051 and erase.
- Carry out road test exceeding 20 km/h (13 mph).
- After the road test interrogate fault memory again.

V.A.G 1551 print-out	Possible cause of fault	Rectifying fault
No fault recognised	If "No fault recognised" appears after carrying out repairs, self diagnosis is ended. If, despite "No fault recognised" appearing in the display, the ABS system does not function properly, then proceed as follows: 1. Carry out road test exceeding 20 km/h (13 mph), 2. Again interrogate fault memory, if there is still no fault stored, 3. Continue fault finding without self-diagnosis and work through the complete Electrical check => Page 34 .	

V.A.G 1551 print-out	Possible cause of fault	Rectifying fault
00283 Front left speed sensor -G47	- Open circuit, short to positive or earth, or loose contact in connections between speed sensor -G47- and control unit -J104	- Check wiring and connections using current flow diagram Perform electrical checks =>from Page 34
	- Damaged rotor or speed sensor -G47 - Speed sensor windings -G47- defective	- Check speed sensor -G47- and rotor for damage Renew rotor/speed sensor -G47 => Brake systems; Repair group 45; Removing and installing parts of ABS system on front and rear axles Removing and installing parts of ABS system on front and rear axles If the fault occurs again:
	- ABS control unit -J104- defective	- Renew control unit -J104 => Brake systems; Repair group 45

V.A.G 1551 print-out	Possible cause of fault	Rectifying fault
00283 Front left speed sensor -G47 Signal outside tolerances1)	- Open circuit, short to positive or earth, or loose contact in connections between speed sensor -G47 and control unit -J104	- Check wiring and connections using current flow diagram Perform electrical checks =>from Page 34
	- Electrical interference from other sources (high frequency radiation e.g. non-insulated ignition cable)	- Read measured value block =>Page 24 Display group number 001
	- Damaged rotor or speed sensor -G47	
	- Excessive air gap between speed sensor -G47- and rotor (signal not OK.)	- Check speed sensor -G47- and rotor for damage Renew rotor/speed sensor

Protected by copyright. Copying for private or commercial purposes, in part or in whole, is not permitted unless authorised by Volkswagen AG. Volkswagen AG does not guarantee or assume any liability with regard to the correctness of information in this document.
Copyright by Volkswagen AG.
satelettronica

V.A.G 1551 print-out	Possible cause of fault	Rectifying fault
		=> Brake systems; Repair group 45; Removing and installing parts of ABS system on front and rear axles Removing and installing parts of ABS system on front and rear axles

1) Type of fault, this fault is only recognised above 20 km/h (13 mph) (carry out test drive).

V.A.G 1551 print-out	Possible cause of fault	Rectifying fault
00283 Front left speed sensor -G47 Mechanical fault1)	- Excessive air gap between speed sensor -G47- and rotor (signal not OK.) - Outlet valve in hydraulic unit -N55- defective	- Check installation of speed sensor -G47- and rotor => Brake systems; Repair group 45; Removing and installing parts of ABS system on front and rear axles 27 If the fault occurs again: - Renew hydraulic unit -N55 => Brake systems; Repair group 45

1) Type of fault, this fault is only recognised above 20 km/h (13 mph) (carry out test drive).

V.A.G 1551 print-out	Possible cause of fault	Rectifying fault
00285 Front right speed sensor -G45	- Open circuit, short to positive or earth, or loose contact in connections between speed sensor -G45- and control unit -J104 - Damaged rotor or speed sensor -G45 - Speed sensor windings -G45- defective - ABS control unit -J104- defective	- Check wiring and connections using current flow diagram Perform electrical checks =>from Page 34 - Check speed sensor -G45- and rotor for damage Renew rotor/speed sensor -G45 => Brake systems; Repair group 45; Removing and installing parts of ABS system on front and rear axles Removing and installing parts of ABS system on front and rear axles If the fault occurs again: - Renew control unit -J104 => Brake systems; Repair group 45

V.A.G 1551 print-out	Possible cause of fault	Rectifying fault
00285 Front right speed sensor -G45 Signal outside tolerances1)	- Open circuit, short to positive or earth, or loose contact in connections between speed sensor -G45- and control unit -J104 - Electrical interference from other sources (high frequency radiation e.g. non-insulated ignition cable) - Damaged rotor or speed sensor -G45 - Excessive air gap between speed sensor -G45- and rotor (signal not OK.)	- Check wiring and connections using current flow diagram Perform electrical checks =>from Page 34 - Read measured value block =>Page 24 Display group number 001 - Check speed sensor -G45- and rotor for damage Renew rotor/speed sensor

satelettronica

V.A.G 1551 print-out	Possible cause of fault	Rectifying fault
		=> Brake systems; Repair group 45; Removing and installing parts of ABS system on front and rear axles Removing and installing parts of ABS system on front and rear axles

1) Type of fault, this fault is only recognised above 20 km/h (13 mph) (carry out test drive).

V.A.G 1551 print-out	Possible cause of fault	Rectifying fault
00285 Front right speed sensor -G45 Mechanical fault1)	- Excessive air gap between speed sensor -G45- and rotor (signal not OK.) - Outlet valve in hydraulic unit -N55- defective	- Check installation of speed sensor -G45- and rotor => Brake systems; Repair group 45; Removing and installing parts of ABS system on front and rear axles 27 If the fault occurs again: - Renew hydraulic unit -N55 => Brake systems; Repair group 45

1) Type of fault, this fault is only recognised above 20 km/h (13 mph) (carry out test drive).

V.A.G 1551 print-out	Possible cause of fault	Rectifying fault
00287 Rear right speed sensor -G44	- Open circuit, short to positive or earth, or loose contact in connections between speed sensor -G44- and control unit -J104 - Damaged rotor or speed sensor -G44 - Speed sensor windings -G44- defective - ABS control unit -J104- defective	- Check wiring and connections using current flow diagram Perform electrical checks =>from Page 34 - Check speed sensor -G44- and rotor for damage Renew rotor/speed sensor -G44 => Brake systems; Repair group 45; Removing and installing parts of ABS system on front and rear axles Removing and installing parts of ABS system on front and rear axles If the fault occurs again: - Renew control unit -J104 => Brake systems; Repair group 45

V.A.G 1551 print-out	Possible cause of fault	Rectifying fault
00287 Rear right speed sensor -G44 Signal outside tolerances1)	- Open circuit, short to positive or earth, or loose contact in connections between speed sensor -G44- and control unit -J104 - Electrical interference from other sources (high frequency radiation e.g. non-insulated ignition cable) - Damaged rotor or speed sensor -G44 - Excessive air gap between speed sensor -G44- and rotor (signal not OK.)	- Check wiring and connections using current flow diagram Perform electrical checks =>from page 34 - Read measured value block =>Page 24 Display group number 001 - Check speed sensor -G44- and rotor for damage Renew rotor/speed sensor

Copyright by Volkswagen AG. Volkswagen AG does not guarantee or accept any liability with respect to the correctness of information in this document. Copying for private or commercial purposes, in part or in whole, is not permitted unless authorised by Volkswagen AG.
satelettronica

V.A.G 1551 print-out	Possible cause of fault	Rectifying fault
		=> Brake systems; Repair group 45; Removing and installing parts of ABS system on front and rear axles Removing and installing parts of ABS system on front and rear axles

1) Type of fault, this fault is only recognised above 20 km/h (13 mph) (carry out test drive).

V.A.G 1551 print-out	Possible cause of fault	Rectifying fault
00287 Rear right speed sensor -G44 Mechanical fault1)	- Excessive air gap between speed sensor -G44- and rotor (signal not OK.) - Outlet valve in hydraulic unit -N55- defective	- Check installation of speed sensor -G44- and rotor => Brake systems; Repair group 45; Removing and installing parts of ABS system on front and rear axles 27 If the fault occurs again: - Renew hydraulic unit -N55 => Brake systems; Repair group 45

1) Type of fault, this fault is only recognised above 20 km/h (13 mph) (carry out test drive).

V.A.G 1551 print-out	Possible cause of fault	Rectifying fault
00290 Rear left speed sensor -G46	- Open circuit, short to positive or earth, or loose contact in connections between speed sensor -G46- and control unit -J104 - Speed sensor windings -G46- defective - Damaged rotor or speed sensor -G46 - ABS control unit -J104- defective	- Check wiring and connections using current flow diagram Perform electrical checks =>from Page 34 - Check speed sensor -G46- and rotor for damage Renew rotor/speed sensor -G46 => Brake systems; Repair group 45; Removing and installing parts of ABS system on front and rear axles Removing and installing parts of ABS system on front and rear axles If the fault occurs again: - Renew control unit -J104 => Brake systems; Repair group 45

V.A.G 1551 print-out	Possible cause of fault	Rectifying fault
00290 Rear left speed sensor -G46 Signal outside tolerances1)	- Open circuit, short to positive or earth, or loose contact in connections between speed sensor -G46- and control unit -J104 - Electrical interference from other sources (high frequency radiation e.g. non-insulated ignition cable) - Damaged rotor or speed sensor -G46 - Excessive air gap between speed sensor -G46- and rotor (signal not OK.)	- Check wiring and connections using current flow diagram Perform electrical checks =>from Page 34 - Read measured value block =>Page 24 Display group number 001 - Check speed sensor -G46- and rotor for damage Renew rotor/speed sensor

satelettronica

V.A.G 1551 print-out	Possible cause of fault	Rectifying fault
		=> Brake systems; Repair group 45; Removing and installing parts of ABS system on front and rear axles Removing and installing parts of ABS system on front and rear axles

1) Type of fault, this fault is only recognised above 20 km/h (13 mph) (carry out test drive).

V.A.G 1551 print-out	Possible cause of fault	Rectifying fault
00290 Rear left speed sensor -G46 Mechanical fault1)	- Excessive air gap between speed sensor -G46- and rotor (signal not OK.) - Outlet valve in hydraulic unit -N55- defective	- Check installation of speed sensor -G46- and rotor => Brake systems; Repair group 45; Removing and installing parts of ABS system on front and rear axles 27 If the fault occurs again: - Renew hydraulic unit -N55 => Brake systems; Repair group 45

1) Type of fault, this fault is only recognised above 20 km/h (13 mph) (carry out test drive).

V.A.G 1551 print-out	Possible cause of fault	Rectifying fault
00668 Vehicle voltage terminal 30 Signal outside tolerances	- Open circuit, short to positive or earth in the wiring	- Check wiring and connections using current flow diagram - Perform electrical checks =>from Page 34
01044 Control unit incorrectly coded	- Control unit -J104- incorrectly coded - Coding bridge in multi-pin connector to control unit -J104- open or short circuit	- Check coding for control unit -J104- =>Page 23 - Check wiring and connections using current flow diagram - Perform electrical checks =>from Page 34

V.A.G 1551 print-out	Possible cause of fault	Rectifying fault
01130 ABS operation Implausible signal1)	- Electrical interference from other sources (high frequency radiation e.g. non-insulated ignition cable) - Open circuit, short to positive or earth in the wiring - ABS control unit -J104- defective	- Erase fault memory Perform test drive at more than 20 km/h (13 mph) Interrogate fault memory again - Check wiring and connections using current flow diagram - Perform electrical checks =>from Page 34 If the fault occurs again: - Renew control unit -J104 => Brake systems; Repair group 45

1) Type of fault, this fault is only recognised above 20 km/h (13 mph) (carry out test drive).

Protected by copyright. Copying for private or commercial purposes, in part or in whole, is not permitted unless authorised by Volkswagen AG. Volkswagen AG does not guarantee or accept any liability with respect to the correctness of information in this document. Copyright by Volkswagen AG.
satelettronica

V.A.G 1551 print-out	Possible cause of fault	Rectifying fault
01276 ABS hydraulic pump -V64 Signal outside tolerances1)	- Hydraulic pump connection -V64- to control unit	- Perform final control diagnosis => Page 27
	- Open circuit, short to positive or earth in the wiring	- Check wiring and connections using current flow diagram - Perform electrical checks =>from Page 34
	- Hydraulic pump -V64- defective	- If hydraulic pump -V64- runs fault-free when test step No. 18 of electrical check is performed => Page 34 , the control unit -J104- must be renewed.
	- ABS control unit -J104- defective	- Renew control unit -J104 => Brake systems; Repair group 45

1) Type of fault, this fault is only recognised above 20 km/h (13 mph) (carry out test drive).

V.A.G 1551 print-out	Possible cause of fault	Rectifying fault
65535 Control unit defective	ABS control unit -J104- defective	- Renew control unit -J104 => Brake systems; Repair group 45

4.10 - Erasing fault memory, ending output

- All functions that have so far been carried out with V.A.G 1551 can now also be carried out with the tester VAS 5051.

Prerequisites:

- Fault memory interrogated => Page 15 .

1. Erasing fault memory

- Press ⇒key.

-> Indicated on display:

```
Rapid data transfer      HELP
Select function XX
```

- Press keys 0 and 5; 05 enters the "Erase fault memory" function.

-> Indicated on display:

```
Rapid data transfer      Q
05 Erase fault memory
```

- Confirm entry with Q key

-> Indicated on display:

```
Rapid data transfer
Fault memory is erased!
```

- Press ⇒ key.

-> Indicated on display:

Protected by copyright. Copying for private or commercial purposes, in part or in whole, is not permitted unless authorised by Volkswagen AG. Volkswagen AG does not guarantee or accept any liability with respect to the correctness of information in this document. Copyright by Volkswagen AG.
satelettronica

```
Rapid data transfer      HELP
Select function XX
```

-> Indicated on display:

```
Warning!
Fault memory was not interrogated.
```

- Adhere exactly to test sequence: First interrogate fault memory, then erase

2. Ending output

- Press keys -0- and -6-, this ends the output.

-> Indicated on display

```
Rapid data transfer      Q
06 - End output
```

- Confirm entry with Q key

-> Indicated on display:

```
Rapid data transfer      HELP
Select function XX
```

- Switch off ignition.
- Disconnect connection to fault reader V.A.G 1551
- Switch on ignition.

ABS warning lamp -K47- and brake system warning lamp -K118- must go out after approx. 2 seconds.

4.11 - Coding control unit

- All functions that have so far been carried out with V.A.G 1551 can now also be carried out with the tester VAS 5051.
- Warning lamps for ABS -K47- and for brake system -K118- flash when control unit is coded with 00000. An entry is not set in the fault memory.
- The control unit -J104- must be recoded if the vehicle relevant coding is not displayed or the control unit has been renewed.

Coding is only possible after the workshop code (WSC) has been entered into V.A.G 1551 or VAS 5051.

Work sequence

- Connect fault reader V.A.G 1551 and select (address word 03) "Brake electronics" with ignition switched on; => Page 11

-> Indicated on display:

```
Rapid data transfer      HELP
Select function XX
```

- Input 07 for the function "Code control unit" and confirm with Q.

-> Indicated on display:

```
Rapid data transfer      Q
07 - Code control unit
```

- Confirm entry with Q key

-> Indicated on display

```
Code control unit
Enter code number     XXXXX     (0-32000)
```

Protected by copyright. Copying for private or commercial purposes, in part or in whole, is not permitted unless authorised by Volkswagen AG. Volkswagen AG does not guarantee or accept any liability with respect to the correctness of information in this document. Copyright by Volkswagen AG.
satelettronica

Code number	Vehicle type
01901	Polo1995▸

-> The control unit coding appears on the display of the fault reader V.A.G 1551, e.g.:

```
"     Coding 01901     WSC XXXXX
```

4.12 - Read measured value block

- All functions that have so far been carried out with V.A.G 1551 can now also be carried out with the tester VAS 5051.

The control unit can transfer a considerable amount of test data. This test data delivers information on the operational condition of the system and/or sensors connected to it. In many cases the transferred test data supports fault finding and fault rectification. The test data has been summarized into single display groups because all the information cannot be evaluated at the same time. The information can be selected via display group numbers.

Safety measures

Note!
-
-
-

- Connect fault reader V.A.G 1551 and select brake electronics control unit with ignition switched on (address word 03); => Page 11

-> Indicated on display:

```
Rapid data transfer       HELP
Select function XX
```

- Press keys 0 and 8. (The function "Read measured value block" is initiated with 08.)

-> Indicated on display:

```
Rapid data transfer       Q
08 - Read measured value block
```

- Confirm entry with key Q.

-> Indicated on display:

```
Read measured value block
Enter display group number XXX
```

- Enter display group number => List of selectable display group numbers, Page 24 .

List of selectable display group numbers

Display group number	Display zone	Designation
001	1	Wheel speed at front left wheel sensor (km/h)
	2	Wheel speed at front right wheel sensor (km/h)
	3	Wheel speed at rear left speed sensor (km/h)
	4	Wheel speed at rear right speed sensor (km/h)
002	1	Wheel speed at front left speed sensor (km/h)
	2	Wheel speed at front right wheel sensor (km/h)

Protected by copyright. Copyright by Volkswagen AG. Copyright by Volkswagen AG. Volkswagen AG does not authorise the use of this document for commercial purposes, in part or in whole. Volkswagen AG does not guarantee or assume any liability with respect to the correctness of information in this document.
satelettronica

Display group number	Display zone	Designation
	3	Wheel speed at rear left speed sensor (km/h)
	4	Wheel speed at rear right speed sensor (km/h)
003	1	Brake light switch
	2	Vacant
	3	Vacant
	4	Vacant

Test sequence and test tables with measured values

Checking speed sensor allocation

Display group number 001

- Press keys 0, 0 and 1
- Confirm entry with key Q.

```
Read measured value block          1
□ 1    □      2      3      □ 4
```

-> There are always 4 display zones -arrows- in the measured value block. Decoding the individual values in display zones 1 to 4 can be read-off from the following tables.

-> Indicated on display: (vehicle stationary)

```
Read measured value block      1      "
0 km/h      0 km/h      0 km/h      0 km/h
```

Press C key for the next display group number entry.

If the ⇒key is pressed it must be continued with keys 0 and 8 for work sequence "Read measured value block".

For display group number 001 remember:

The actual wheel speeds are displayed. They serve to check the speed sensor allocation to the wheel. (The vehicle must be raised and the wheel must be rotated by hand by a 2nd mechanic).

Read measured value block			1 ⇒	Display group number: 001
0 km/h	4 km/h	0 km/h	0 km/h	◂ Indicated on display: (Example)
				Wheel speed at rear right speed sensor - (0...255 km/h)
			Wheel speed at rear left speed sensor - (0...255 km/h)	
		Wheel speed at front right speed sensor - (0...255 km/h)		
	Wheel speed at front left speed sensor - (0...255 km/h)			

Checking speed sensor

Display group number 002

- Press keys 0, 0 and 2
- Confirm entry with key Q.

```
Read measured value block          2
□ 1    □      2      3      □ 4
```

-> There are always 4 display zones -arrows- in the measured value block. Decoding the individual values in display zones 1 to 4 can be read-off from the following tables.

-> Indicated on display: (vehicle stationary)

Protected by copyright. Copying for private or commercial purposes, in part or in whole, is not permitted unless authorised by Volkswagen AG. Volkswagen AG does not guarantee or accept any liability with respect to the correctness of information in this document. Copyright by Volkswagen AG.
satelettronica

```
Read measured value block      2
255 km/h     255 km/h     255 km/h     255
km/h
```

Press C key for the next display group number entry.

If the ⇒key is pressed it must be continued with keys 0 and 8 for work sequence "Read measured value block".

For display group number 002 remember:

The reading of measured value blocks in display group number 002 must be undertaken when driving off slowly. Then the control unit -J104- will store the first usable voltage signals provided by the speed sensors and display these as a fixed value in the measured value block.

Protected by copyright. Copying for private or commercial purposes, in part or in whole, is not permitted unless authorised by Volkswagen AG. Volkswagen AG does not guarantee or accept any liability with respect to the correctness of information in this document. Copyright by Volkswagen AG.

Read measured value block 2 ⇒	Display group number: 002
3 km/h1) 6 km/h1) 2 km/h1) 1 km/h1)	◂ Indicated on display: (when driving off slowly)
Wheel speed at rear right speed sensor - (0...255 km/h) Wheel speed at rear left speed sensor - (0...255 km/h) Wheel speed at front right speed sensor - (0...255 km/h) Wheel speed at front left speed sensor - (0...255 km/h)	

1) If the deviations in display zones 1 to 4 are greater than 6 km/h (approx. 3.75 mph), the following faults may be present:

◆ Air gap between speed sensor and rotor may be too big.

- Check that speed sensor is screwed correctly to wheel bearing housing.

◆ Speed sensor or rotor exterior damaged.

- Change damaged component.

Checking brake light switch for ABS function

Display group number 003

- Press keys 0, 0 and 3
- Confirm entry with key Q.

```
Read measured value block      3
□ 1     □      2      3      □ 4
```

-> There are always 4 display zones -arrows- in the measured value block. Decoding the individual values in display zones 1 to 4 can be read-off from the following tables.

-> Indicated on display:

```
Read measured value block      3      - "
     0
```

Press C key for the next display group number entry.

If the ⇒key is pressed it must be continued with keys 0 and 8 for work sequence "Read measured value block".

Read measured value block 3 ⇒	Display group number: 003
0	◂ Indicated on display
Vacant	Vacant

satelettronica

Vacant Brake light switch: - 0 ⇒Brake pedal not depressed - 1 ⇒Brake pedal depressed If despite depressed foot brake a -0- or not depressed foot brake a -1- is displayed on the V.A.G 1551 display, perform test step No. 4 of Electrical check, Page 34 . There is also a possibility that the brake light switch has not been adjusted correctly. => Brake system; Repair group 46; Brake pedal - Assembly overview; Adjusting brake light switch Brake pedal - Assembly overview; Adjusting brake light switch

4.13 - Final control diagnosis

- All functions that have so far been carried out with V.A.G 1551 can now also be carried out with the tester VAS 5051.

The pump motor and the correct functioning of the hydraulic circuits (allocation of brake pipes to wheel cylinders and function of valves) can be checked via the final control diagnosis for interchanging or leaks.

Notes:

- The vehicle must be raised until all wheels are free to turn. (2nd mechanic required to rotate wheels)
- The -C- key can be used to exit the test sequence at any time.
- After depressing the brake pedal several times the vacuum in the brake servo will be exhausted. Therefore more pressure must be applied to the brake pedal in order to attain the same fluid pressure in brake system, as that attained with vacuum.
- When vacuum in brake servo is exhausted it can happen that the wheels do not lock;start engine and build-up vacuum in brake servo.

Example:

Indicated on V.A.G 1551 display during final control diagnosis

(e.g. front left wheel, FL)

Final control diagnosis - ⇒ IFL: VBAT OFL: 0V Wheel FL locked

IFL = Inlet valve Front Left

VBAT = Voltage Battery; Voltage at valve

OFL = Outlet valve Front Left

0V = 0 Volt; No voltage at valve

Locked/free = Wheel condition; must be checked by 2nd mechanic if required

Final control diagnosis - ⇒ EDL valves/Hyd-P: VBAT Wheels FL/FR locked

Hydr-P = Hydraulic pump

- Connect fault reader V.A.G 1551.
- Switch on ignition.
- Press key -1- for "Rapid data transfer" operating mode.
- Select brake electronics control unit (address word 03); => Page 60

-> Indicated on display:

```
Rapid data transfer     Q
03 - Brake electronics
```

satelettronica

- Confirm entry with key Q.

During the next work steps, the ABS -K47- and the brake system -K118- warning lamps flash.

- Read off control unit version in V.A.G 1551 display.
- Press ⇒ key.

-> Indicated on display

```
Rapid data transfer      HELP
Select function XX
```

- Press keys 0 and 3

-> Indicated on display

```
Rapid data transfer      Q
03 - Final control diagnosis
```

- Confirm entry with key Q.

ABS hydraulic pump -V64- must run.

-> Indicated on display

```
Final control diagnosis      -
ABS hydraulic pump - V64
```

- Press ⇒ key.

-> Indicated on display

```
Final control diagnosis      -
Operate brakes
```

- Operate brake pedal.
- Press ⇒ key.

-> Indicated on display

```
Final control diagnosis      -
IFL: 0V     OFL: 0V          Wheel FL
locked
```

- Indicate to 2nd mechanic which wheel requires turning by hand.

If the wheel does not lock, there is a possibility that there is a fault in the mechanical/hydraulic part of the brake system.

- Press ⇒ key.

-> Indicated on display

```
Final control diagnosis      -
IFL: VBAT     OFL: 0V          Wheel FL
locked
```

- Press ⇒ key.

ABS hydraulic pump -V64- must run.

Brake pedal must not give.

If the brake pedal gives, there is a fault in the hydraulic unit. In this case the hydraulic unit must be replaced.

=> Brake system; Repair group 45

-> Indicated on display

Protected by copyright. Copying for private or commercial purposes, in part or in whole, is not permitted unless authorised by Volkswagen AG. Volkswagen AG does not guarantee or accept any liability with respect to the correctness of information in this document. Copyright by Volkswagen AG.
satelettronica

```
Final control diagnosis      -
IFL: VBAT     OFL: VBAT          Wheel FL
free
```

- Indicate to 2nd mechanic which wheel requires turning by hand.

If the wheellocksthere is a possibility that the brake pipes to the wheel calipers/cylinders have been interchanged.

- Press ⇒ key.

ABS hydraulic pump -V64 no longer runs.

-> Indicated on display

```
Final control diagnosis      -
IFL: VBAT     OFL: 0V         Wheel FL
free
```

- Press ⇒ key.

Brake pedal must give perceptibly

If the brake pedal does notgive, there is a fault in the hydraulic unit. In this case the hydraulic unit must be replaced.

=> Brake system; Repair group 45

-> Indicated on display

```
Final control diagnosis      -
IFL: 0V     OFL: 0V          Wheel FL
locked
```

- Indicate to 2nd mechanic which wheel requires turning by hand.

If the wheel does not lock, there is a possibility that there is a fault in the mechanical/hydraulic part of the brake system.

- Press ⇒ key.

-> Indicated on display

```
Final control diagnosis      -
Release brakes
```

- Remove foot from brake pedal.
- Press ⇒ key.

-> Indicated on display

```
Final control diagnosis      -
Operate brakes
```

- Operate brake pedal.
- Press ⇒ key.

-> Indicated on display

```
Final control diagnosis      -
IFR: 0V     OFR: 0V          Wheel FR
locked
```

- Indicate to 2nd mechanic which wheel requires turning by hand.

If the wheel does not lock, there is a possibility that there is a fault in the mechanical/hydraulic part of the brake system.

Protected by copyright. Copying for private or commercial purposes, in part or whole, is not permitted unless authorised by Volkswagen AG. Volkswagen AG does not guarantee or accept any liability with respect to the correctness of information in this document. Copyright by Volkswagen AG.
satelettronica

- Press ⇒ key.

-> Indicated on display

```
Final control diagnosis      -
IFR: VBAT     OFR: 0V         Wheel FR
locked
```

- Press ⇒ key.

ABS hydraulic pump -V64- must run.

Brake pedal must not give

If the brake pedal gives, there is a fault in the hydraulic unit. In this case the hydraulic unit must be replaced.

=> Brake system; Repair group 45

-> Indicated on display

```
Final control diagnosis      -
IFR: VBAT     OFR: VBAT          Wheel
FR     free
```

- Indicate to 2nd mechanic which wheel requires turning by hand.

If the wheellocksthere is a possibility that the brake pipes to the wheel calipers/cylinders have been interchanged.

- Press ⇒ key.

ABS hydraulic pump -V64 no longer runs.

-> Indicated on display

```
Final control diagnosis      -
IFR: VBAT     OFR: 0V          Wheel FR
free
```

- Press ⇒ key.

Brake pedal must give perceptibly

If the brake pedal does notgive, there is a fault in the hydraulic unit. In this case the hydraulic unit must be replaced.

=> Brake system; Repair group 45

-> Indicated on display

```
Final control diagnosis      -
IFR: 0V     OFR: 0V          Wheel FR
locked
```

- Indicate to 2nd mechanic which wheel requires turning by hand.

If the wheel does not lock, there is a possibility that there is a fault in the mechanical/hydraulic part of the brake system.

- Press ⇒ key.

-> Indicated on display

```
Final control diagnosis      -
Release brakes
```

- Remove foot from brake pedal.

Protected by copyright. Copyright by Volkswagen AG. Volkswagen AG does not guarantee or accept any liability with respect to the correctness of information in this document. Copyright by Volkswagen AG. Commercial purposes, in part or in whole, is not permitted unless authorised by Volkswagen AG.
satelettronica

- Press ⇒ key.

-> Indicated on display

```
Final control diagnosis      -
Operate brakes
```

- Operate brake pedal.
- Press ⇒ key.

-> Indicated on display

```
Final control diagnosis      -
IRL: 0V     ORL: 0V          Wheel RL
locked
```

- Indicate to 2nd mechanic which wheel requires turning by hand.

If the wheel does not lock, there is a possibility that there is a fault in the mechanical/hydraulic part of the brake system.

- Press ⇒ key.

-> Indicated on display

```
Final control diagnosis      -
IRL: VBAT     ORL: 0V         Wheel RL
locked
```

- Press ⇒ key.

ABS hydraulic pump -V64- must run.

Brake pedal must not give

If the brake pedal gives, there is a fault in the hydraulic unit. In this case the hydraulic unit must be replaced.

=> Brake system; Repair group 45

-> Indicated on display

```
Final control diagnosis      -
IRL: VBAT     ORL: VBAT          Wheel
RL     free
```

- Indicate to 2nd mechanic which wheel requires turning by hand.

If the wheellocksthere is a possibility that the brake pipes to the wheel calipers/cylinders have been interchanged.

- Press ⇒ key.

ABS hydraulic pump -V64 no longer runs.

-> Indicated on display

```
Final control diagnosis      -
IRL: VBAT     ORL: 0V         Wheel RL
free
```

- Press ⇒ key.

Brake pedal must give perceptibly

If the brake pedal does notgive, there is a fault in the hydraulic unit. In this case the hydraulic unit must be replaced.

Protected by copyright. Copying for private or commercial purposes, in part or whole, is not permitted unless authorised by Volkswagen AG. Volkswagen AG does not guarantee or accept any liability with respect to the correctness of information in this document. Copyright by Volkswagen AG.
satelettronica

=> Brake system; Repair group 45

-> Indicated on display

```
Final control diagnosis      -
IRL: 0V     ORL: 0V          Wheel RL
locked
```

- Indicate to 2nd mechanic which wheel requires turning by hand.

If the wheel does not lock, there is a possibility that there is a fault in the mechanical/hydraulic part of the brake system.

- Press ⇒ key.

-> Indicated on display

```
Final control diagnosis      -
Release brakes
```

- Remove foot from brake pedal.
- Press ⇒ key.

-> Indicated on display

```
Final control diagnosis      -
Operate brakes
```

- Operate brake pedal.
- Press ⇒ key.

-> Indicated on display

```
Final control diagnosis      -
IRR: 0V     ORR: 0V           Wheel RR
locked
```

- Indicate to 2nd mechanic which wheel requires turning by hand.

If the wheel does not lock, there is a possibility that there is a fault in the mechanical/hydraulic part of the brake system.

- Press ⇒ key.

-> Indicated on display

```
Final control diagnosis      -
IRR: VBAT     ORR: 0V         Wheel RR
locked
```

- Press ⇒ key.

ABS hydraulic pump -V64- must run.

Brake pedal must not give

If the brake pedal gives, there is a fault in the hydraulic unit. In this case the hydraulic unit must be replaced.

=> Brake system; Repair group 45

-> Indicated on display

```
Final control diagnosis      -
IRR: VBAT     ORR: VBAT          Wheel
RR     free
```

- Indicate to 2nd mechanic which wheel requires turning by hand.

Protected by copyright. Copyright by Volkswagen AG. Volkswagen AG does not guarantee or accept any liability with respect to the correctness of information in this document. Copyright by Volkswagen AG. Reproduced for personal purposes, in part or in whole, is not permitted unless authorised by Volkswagen AG.
satelettronica

If the wheellocksthere is a possibility that the brake pipes to the wheel calipers/cylinders have been interchanged.

- Press ⇒ key.

ABS hydraulic pump -V64 no longer runs.

-> Indicated on display

```
Final control diagnosis      -
IRR: VBAT     ORR: 0V         Wheel RR
free
```

- Press ⇒ key.

Brake pedal must give perceptibly

If the brake pedal does notgive, there is a fault in the hydraulic unit. In this case the hydraulic unit must be replaced.

=> Brake system; Repair group 45

-> Indicated on display

```
Final control diagnosis      -
IRR: 0V     ORR: 0V     Wheel RR     locked
```

- Indicate to 2nd mechanic which wheel requires turning by hand.

If the wheel does not lock, there is a possibility that there is a fault in the mechanical/hydraulic part of the brake system.

- Press ⇒ key.

-> Indicated on display

```
Final control diagnosis      -
Release brakes
```

- Remove foot from brake pedal.
- Press ⇒ key.

-> Indicated on display (vehicles with EDL)

```
Final control diagnosis      -
EDL valves/Hyd-P: VBAT Wh FL/FR locked
```

- A 2nd mechanic is required to rotate the respective wheel by hand.

If the wheels do not lock, there is a fault in the hydraulic part of the ABS system. In this case the hydraulic unit must be replaced.

=> Brake systems; Repair group 45; Hydraulic unit, brake servo/brake master cylinder - Assembly overview; Removing and installing control unit and hydraulic unit Hydraulic unit, brake servo/brake master cylinder - Assembly overview Removing and installing control unit and hydraulic unit

- Press ⇒ key.

The ABS -K47- and brake system -K118- warning lamps go out.

-> Indicated on display

```
Function is unknown or
cannot be carried out at the moment
```

The final control diagnosis is completed

- Press ⇒ key.

Protected by copyright. Copying for private or commercial purposes, in part or in whole, is not permitted unless authorised by Volkswagen AG. Volkswagen AG does not guarantee or accept any liability with respect to the correctness of information in this document. Copyright by Volkswagen AG.
satelettronica

-> Indicated on display

```
Rapid data transfer      HELP
Select function XX
```

Notes:

- There is a fault in the system if the ABS warning lamp -K47- does not go out.
- Adhere exactly to test sequence: First interrogate fault memory, then erase

- End output (Function 06) => Page 22 .

5 - Electrical check of ABS ITT Mark 04 GI

5.1 - Electrical check of ABS ITT Mark 04 GI

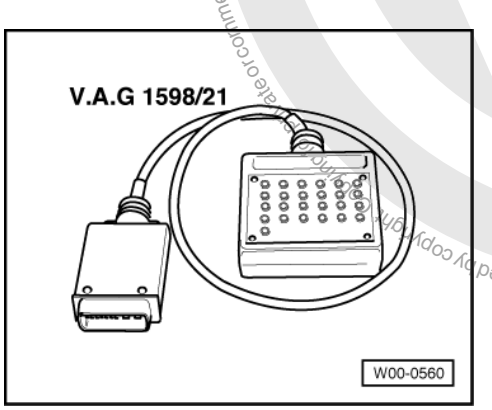

Special tools and workshop equipment required

- V.A.G 1598/21 Adapter

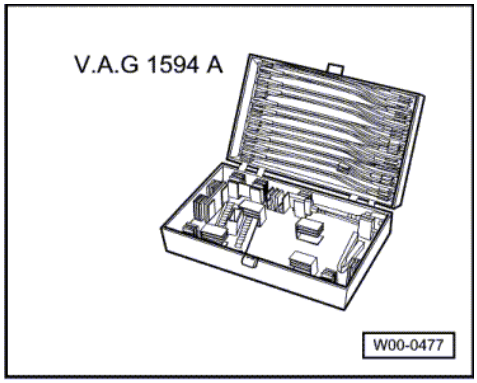

- V.A.G 1594 A Auxiliary test set

Protected by copyright. Copying for private or commercial purposes, in part or in whole, is not permitted unless authorised by Volkswagen AG. Volkswagen AG does not guarantee or accept any liability with respect to the correctness of information in this document. Copyright by Volkswagen AG.
satelettronica

- V.A.G 1526 A Hand multimeter

The test steps from Page 38 are valid for:

- For vehicles on which the self diagnosis does not give any indication of the source of the fault. Work through the complete electrical check.
- For vehicles on which the self diagnosis provides a direct indication of the source of the fault. Only carry out the test steps recommended in the fault table (directed entry).

An overview of all the test steps in the electrical check can be found on Page 37 .

5.2 - Test prerequisites

- Switch ignition and electrical consumers off before commencing the check (headlights, lighting, fan ...).
- Fuses S16, S20, S123, S124 OK (remove fuses from fuse holder to check).

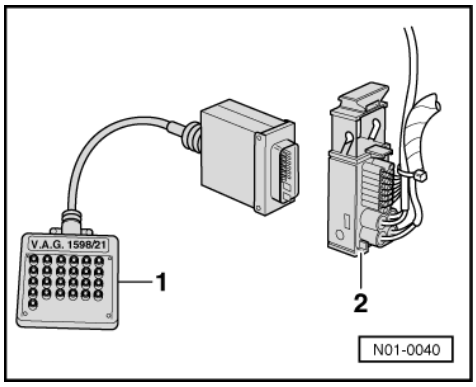

- -> Connect test box V.A.G 1598/21 -1- to multi-pin connector of control unit -J104- -2-.

The specified values are matched to the V.A.G 1526 and are not necessarily applicable for other test units.

Protected by copyright. Copyright by Volkswagen AG. Copyright by Volkswagen AG. Volkswagen AG does not guarantee or accept any liability with respect to the correctness of information in this document. Copyright by Volkswagen AG. Reproduction for commercial purposes, in part or in whole, is not permitted unless authorised by Volkswagen AG.
satelettronica

5.3 - Multi-pin connector with contact assignment

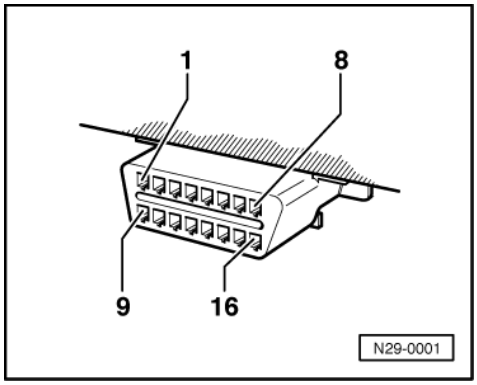

All contacts not listed are currently not assigned and must never be connected to other components!

-> Contact assignment of connectors for voltage supply and self-diagnosis with the fault reader V.A.G 1551 or the tester VAS 5051

Contact 4 = Earth (terminal 31)
Contact 16 = Positive (terminal 30)
Contact 7 = K wire to contact 6 of multi-pin connector T25 of control unit -J104

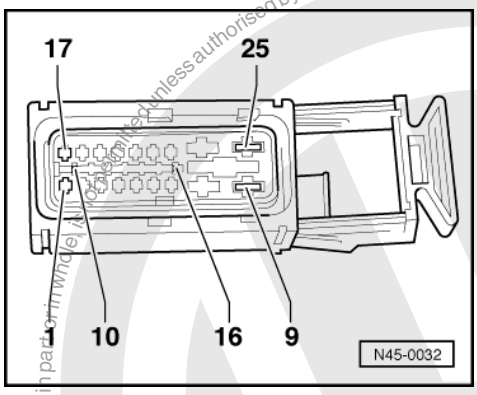

-> Contact assignment of connector T25 wiring loom/control unit - J104

Contact		Wiring connection to component ...
1	=>	Front right speed sensor -G45
2	=>	Coding bridge to contact 12
3	=>	Front left speed sensor -G47
4	=>	Vacant
5	=>	Rear right speed sensor -G44
6	=>	Connector T16/7, K wire
7	=>	EBD warning lamp activation
8	=>	Voltage supply from battery +
9	=>	Voltage supply from battery +
10	=>	Brake light switch -F
11	=>	Vacant

Copyright by Volkswagen AG. Volkswagen AG does not guarantee or accept any liability with respect to the correctness of information in this document. Copying for private or commercial purposes, in part or in whole, is not permitted unless authorised by Volkswagen AG. Volkswagen AG does not guarantee or accept any liability with respect to the correctness of information in this document. Copyright by Volkswagen AG.
satelettronica

Contact	Wiring connection to component ...
12	=> Coding bridge to contact 2

Contact	Wiring connection to component ...
13	=> Rear right speed sensor -G44
14	=> Rear left speed sensor -G46
15	=> Vacant
16	=> ABS warning lamp activation
17	=> Front right speed sensor -G45
18	=> Front left speed sensor -G47
19	=> Vacant
20	=> Vacant
21	=> Rear left speed sensor -G46
22	=> Voltage supply terminal X
23	=> Vacant
24	=> Earth point left in engine compartment and earth connection in engine compartment wiring harness
25	=> Earth point left in engine compartment and earth connection in engine compartment wiring harness

Test step overview

Component to be tested	
Voltage supply for hydraulic pump -V64- to control unit -J104	- Perform test step 1
Voltage supply for valves in hydraulic unit -N55- to control unit -J104	- Perform test step 2
Voltage supply (terminal X) to control unit -J104	- Perform test step 3
Function of brake light switch -F	- Perform test step 4
Resistance of front right speed sensor -G45	- Perform test step 5
Resistance of front left speed sensor -G47	- Perform test step 6
Resistance of rear right speed sensor -G44	- Perform test step 7
Resistance of rear left speed sensor -G46	- Perform test step 8
Voltage signal of front right speed sensor -G45	- Perform test step 9
Voltage signal of front left speed sensor -G47	- Perform test step 10

Component to be tested	
Voltage signal of rear right speed sensor -G44	- Perform test step 11
Voltage signal of rear left speed sensor -G46	- Perform test step 12
Coding bridge	- Perform test step 13
Voltage supply for V.A.G 1551, connector T16	- Perform test step 14
Resistance of K wire for self-diagnosis, connector T16	- Perform test step 15
Function of ABS warning lamp -K47	- Perform test step 16
Function of brake system warning lamp -K118	- Perform test step 17
Function of hydraulic pump -V64	- Perform test step 18

Protected by copyright. Copying for private or commercial purposes, in part or in whole, is not permitted unless authorised by Volkswagen AG. Volkswagen AG does not guarantee or accept any liability with respect to the correctness of information in this document. Copyright by Volkswagen AG.
satelettronica

5.4 - Test table

Notes on test table

- The socket designations of adapter V.A.G 1598/21 are identical to the control unit -J104- contact designations in current flow diagram.

=> Current flow diagrams, Electrical fault finding and Fitting locations binder.

- If the readings obtained deviate from the specifications, carry out fault rectification measure in the right-hand part of the table.

=> Current flow diagrams, Electrical fault finding and Fitting locations binder.

- Continuity checks with adapter set V.A.G 1594 (bridging).
- If the measured figures only deviate slightly from the specifications, clean sockets and plugs of the testers and adapter cables (with contact spray G 000 700 04) and repeat check. Before replacing components, check wiring and connections and also, particularly for specifications of less than 10 ω, repeat resistance check on the component.

Switch to measuring range: Voltage measurement (20 V =)					
Test step	V.A.G 1598 sockets	Item tested	▪ Test conditions - Additional operations	Specification	Measures for deviations from specification
1	8 + 25	Voltage supply for hydraulic pump -V64- to control unit -J104	▪ Ignition switched off	10.0 - 14.5 V	- Check wire using current flow diagram => Current flow diagrams, Electrical fault finding and Fitting locations binder
2	9 + 24	Voltage supply for the valves in hydraulic unit -N55- to control unit -J104	▪ Ignition switched off	10.0 - 14.5 V	- Check wire using current flow diagram => Current flow diagrams, Electrical fault finding and Fitting locations binder

Switch to measuring range: Voltage measurement (20 V =)					
Test step	V.A.G 1598 sockets	Item tested	▪ Test conditions - Additional operations	Specification	Measures for deviations from specification
3	22 + 24	Voltage supply (terminal X) to control unit -J104	▪ Ignition switched on	10.0 - 14.5 V	- Check wire using current flow diagram => Current flow diagrams, Electrical fault finding and Fitting locations binder
4	10 + 24	Function of brake light switch -F	▪ Ignition switched off ▪ Brake pedal not depressed	0.0 - 0.5 V	- Check brake light switch -F- and read measured value block, =>Page 24 , display group 003

Protected by copyright. Copying for private or commercial purposes, in part or in whole, is not permitted unless authorised by Volkswagen AG. Volkswagen AG does not guarantee or accept any liability with respect to the correctness of information in this document. Copyright by Volkswagen AG.
satelettronica

Switch to measuring range: Voltage measurement (20 V =)					
			- Depress brake pedal	approx. battery voltage	- Adjusting brake light switch => Brake system; Repair group 46; Brake pedal - Assembly overview; Adjusting brake light switch Brake pedal - Assembly overview; Adjusting brake light switch - Check wiring using current flow diagram => Current flow diagrams, Electrical fault finding and Fitting locations binder

Switch to measuring range: Resistance measurement (2 kω)					
Test step	V.A.G 1598 sockets	Item tested	▪ Test conditions - Additional operations	Specification	Measures for deviations from specification
5	1 + 17	Resistance of front right speed sensor - G45	▪ Ignition switched off	1.0...1.3 kω	- Check wiring using current flow diagram => Current flow diagrams, Electrical fault finding and Fitting locations binder - Wiggle wiring during test If no fault can be located in the wiring: - Renew speed sensor -G45 => Brake systems; Repair group 45; Removing and installing parts of ABS system on front and rear axles Removing and installing parts of ABS system on front and rear axles

Switch to measuring range: Resistance measurement (2 kω)					
Test step	V.A.G 1598 sockets	Item tested	▪ Test conditions - Additional operations	Specification	Measures for deviations from specification
6	3 + 18	Resistance of front left speed sensor -G47	▪ Ignition switched off	1.0...1.3 kω	- Check wiring using current flow diagram

Protected by copyright. Copyright Volkswagen AG. Copyright. Copying for private or commercial purposes, in part or in whole, is not permitted unless authorised by Volkswagen AG. Volkswagen AG does not guarantee the accuracy and completeness of information in this document. Liability with respect to the correctness of information in this document.
satelettronica

Switch to measuring range: Resistance measurement (2 kω)					
					=> Current flow diagrams, Electrical fault finding and Fitting locations binder - Wiggle wiring during test If no fault can be located in the wiring: - Renew speed sensor -G47 => Brake systems; Repair group 45; Removing and installing parts of ABS system on front and rear axles Removing and installing parts of ABS system on front and rear axles

Switch to measuring range: Resistance measurement (2 kω)					
Test step	V.A.G 1598 sockets	Item tested	▪ Test conditions - Additional operations	Specification	Measures for deviations from specification
7	5 + 13	Resistance of rear right speed sensor -G44	▪ Ignition switched off	1.0...1.3 kω	- Check wiring using current flow diagram => Current flow diagrams, Electrical fault finding and Fitting locations binder - Wiggle wiring during test If no fault can be located in the wiring: - Renew speed sensor -G44 => Brake systems; Repair group 45; Removing and installing parts of ABS system on front and rear axles Removing and installing parts of ABS system on front and rear axles

Switch to measuring range: Resistance measurement (2 kω)					
Test step	V.A.G 1598 sockets	Item tested	▪ Test conditions - Additional operations	Specification	Measures for deviations from specification
8	14 + 21	Resistance of rear left speed sensor -G46	▪ Ignition switched off	1.0...1.3 kω	- Separate connector on speed sensor -G46

Volkswagen AG. Volkswagen AG does not guarantee or assume any liability with respect to the correctness of information in this document. Copyright by Volkswagen AG. Protected by copyright. Copying for private or commercial purposes, in part or in whole, is not permitted unless authorised by Volkswagen AG.
satelettronica

Switch to measuring range:
Resistance measurement (2 kω)

					- Check wiring using current flow diagram => Current flow diagrams, Electrical fault finding and Fitting locations binder - Wiggle wiring during test If no fault can be located in the wiring: - Renew speed sensor -G46 => Brake systems; Repair group 45; Removing and installing parts of ABS system on front and rear axles Removing and installing parts of ABS system on front and rear axles

Switch to measuring range:
Voltage measurement (2 V font=symbol charset=fontspecific code=64 descr='[ap]')

Test step	V.A.G 1598 sockets	Item tested	▪ Test conditions - Additional operations	Specification	Measures for deviations from specification
9	1 + 17	Front right speed sensor -G45- voltage signal	▪ Vehicle raised		- Check installation of speed sensor -G45- and rotor.
			▪ Ignition switched off - Rotate front right wheel at approx. 1 rev./sec.	min. 65 mV alternating voltage	- Check whether speed sensor -G45- has been interchanged andread measured value block =>Page 24 , display group number 001
10	3 + 18	Front left speed sensor -G47- voltage signal	▪ Vehicle raised		- Check installation of speed sensor -G47- and rotor.
			▪ Ignition switched off - Rotate front left wheel at approx. 1 rev./sec.	min. 65 mV alternating voltage	- Check whether speed sensor -G47- has been interchanged andread measured value block =>Page 24 , display group number 001

Protected by copyright. Copying for private or commercial purposes, in part or in whole, is not permitted unless authorised by Volkswagen AG. Volkswagen AG does not guarantee or accept any liability with respect to the correctness of information in this document. Copyright by Volkswagen AG.
satelettronica

Switch to measuring range: Voltage measurement (2 V font=symbol charset=fontspecific code=64 descr='[ap]')					
Test step	V.A.G 1598 sockets	Item tested	▪ Test conditions - Additional operations	Specification	Measures for deviations from specification
11	5 + 13	Rear right speed sensor -G44- voltage signal	▪ Vehicle raised ▪ Ignition switched off - Rotate rear right wheel at approx. 1 rev./sec.	min. 190 mV alternating voltage	- Check installation of speed sensor -G44- and rotor. - Check whether speed sensor -G44- has been interchanged andread measured value block =>Page 24 , display group number 001
12	14 + 21	Rear left speed sensor -G46- voltage signal	▪ Vehicle raised ▪ Ignition switched off - Rotate rear left wheel at approx. 1 rev./sec.	min. 190 mV alternating voltage	- Check installation of speed sensor -G46- and rotor. - Check whether speed sensor -G46- has been interchanged andread measured value block =>Page 24 , display group number 001

Switch to measuring range: Resistance measurement (200 ω)					
Test step	V.A.G 1598 sockets	Item tested	▪ Test conditions - Additional operations	Specification	Measures for deviations from specification
13	2 + 12	Coding bridge	▪ Ignition switched off	0.0 -1.0 ω	- Check wiring using current flow diagram => Current flow diagrams, Electrical fault finding and Fitting locations binder

Switch to measuring range: Voltage measurement (20 V =)					
Test step	V.A.G 1598 sockets	Item tested	▪ Test conditions - Additional operations	Specification	Measures for deviations from specification
14	-	Supply voltage for V.A.G 1551, connector T161)	▪ Ignition switched off Connect hand multimeter V.A.G 1526 using adapter set V.A.G 1594 to connector T161)	10.0 -14.5 V	- Check wiring using current flow diagram

Protected by copyright. Copying for private or commercial purposes, in part or in whole, is not permitted unless authorised by Volkswagen AG. Volkswagen AG does not guarantee or accept any liability with respect to the correctness of information in this document.
satelettronica

Switch to measuring range: Voltage measurement (20 V =)					
					=> Current flow diagrams, Electrical fault finding and Fitting locations binder

1) Diagnosis connection contact assignment =>Page 36 .

Switch to measuring range: Resistance measurement 200 ω					
Test step	V.A.G 1598 sockets	Item tested	▪ Test conditions - Additional operations	Specification	Measures for deviations from specification
15	-	Resistance of K wire for V.A.G 1551 connector T161)	▪ Ignition switched off Disconnect multi-pin connector from control unit -J104 - Connect test box V.A.G 1598/21 - Connect multimeter V.A.G 1526 to contacts T16/71) and T25/6 of multi-pin connectors from control unit -J104- using adapter set V.A.G 1594	max. 1.5 ω	- Check wiring using current flow diagram => Current flow diagrams, Electrical fault finding and Fitting locations binder

1) Diagnosis connection contact assignment =>Page 36 .

Functional check: ABS warning lamp -K47					
Test step	V.A.G 1598 sockets	Item tested	▪ Test conditions - Additional operations	Specification	Measures for deviations from specification
16	-	Function of ABS warning lamp - K47	▪ Switch ignition on	Warning lamp - K47- lights up for approx. 2 seconds and goes out again	- Check wiring using current flow diagram => Current flow diagrams, Electrical fault finding and Fitting locations binder - Fault in dash panel insert => General body repairs, interior; Repair group 70; Dash panel

Copyright. Copying for private or commercial purposes, in part or in whole, is not permitted unless authorised by Volkswagen AG. Volkswagen AG does not guarantee or accept any liability with respect to the correctness of information in this document. Copyright by Volkswagen AG.
satelettronica

Functional check: Brake system warning lamp -K118					
Test step	V.A.G 1598 sockets	Item tested	▪ Test conditions - Additional operations	Specification	Measures for deviations from specification
17	-	Function of brake system warning lamp -K118	▪ Handbrake not applied ▪ Brake fluid level is OK. ▪ Switch ignition on - Apply handbrake	Warning lamp -K118- does not light up Warning lamp -K118- lights up	- Check wiring using current flow diagram => Current flow diagrams, Electrical fault finding and Fitting locations binder - Fault in dash panel insert => General body repairs, interior; Repair group 70; Dash panel

Functional check: Hydraulic pump -V64					
Test step	V.A.G 1598 sockets	Item tested	▪ Test conditions - Additional operations	Specification	Measures for deviations from specification
18	-	Function of ABS hydraulic pump -V64-	▪ Ignition switched off Pull connector T2d off ABS hydraulic pump -V64- on control unit -J104 - Connect earth and T2d/2 battery voltage to ABS hydraulic pump connector -V64- T2d/1	Hydraulic pump -V64 runs fault free (max. 10 seconds) Hydraulic pump -V64 does not run	- Perform final control diagnosis => Page 27 . Renew control unit -J104. - Renew hydraulic unit -N55. => Brake system; Repair group 45

6 - Self-diagnosis function ITT Mark 20 GI and ITT Mark 20 IE

6.1 - Self-diagnosis function ITT Mark 20 GI and ITT Mark 20 IE

6.2 - Function

The ABS designation has been changed:

satelettronica

Previously: Teves 20 GI

New: ITT Mark 20 GI up to 06/97

The work sequence and function has not changed because of the new designation. Both ABS systems are identical.

From 07.97 (model year 98) the following ABS system was introduced.

ITT MARK 20 IE

This ABS system is nearly identical with the ITT Mark 20 GI. The difference is the control unit software.

The self-diagnosis relates to the electrical/electronic part of the ABS, in other words only faults via the electrical connection to the control unit are recognised (e.g. speed sensor open circuit).

The 25 pin ABS control unit -J104- forms with the hydraulic unit a compact unit. The unit is located on the left of the engine compartment. The control unit is equipped with a fault memory.The diagnostic connections are located behind driver's stowage box.

The control unit recognises faults and malfunctions during vehicle operation and stores them in a permanent memory, the contents of which remain despite the lack of battery voltage.

Sporadic (isolated) faults will also be recognised and stored. But if these faults do not occur again within the next 50 vehicle starts and driving off sequences then with the exception of "control unit defective", the fault memory will be erased (forget fault counter).

After switching on the ignition and/or starting the engine the ABS warning lamp -K47- lights up for approx. 2 seconds.

During this period a test sequence (self-check) is run in the control unit for the following functions:

- The voltage supply is checked, at least 10.0 Volt
- The control unit including the valve windings are checked
- Control unit coding checked
- A static check of the speed sensor (no speed signal),
- If after driving off and exceeding a speed of approx. 20 km/h (approx. 13 mph) the speed signal is not OK. the ABS warning lamp -K47- will light up again.

Fault reader V.A.G 1551 or tester VAS 5051

The self-diagnosis must be initiated at the commencement of fault finding. Electrical faults which influence the braking characteristics will be stored. They can be interrogated either with the fault reader V.A.G 1551 or with the tester VAS 5051.

The fault information displayed is used in conjunction with a fault table which has information on the possible fault causes for pin-pointed repair measures.

6.3 - Distinguishing features of ABS ITT Mark 20 GI / ITT Mark 20IE and ABS/EDL ITT Mark 20 GI / ITT Mark 20 IE

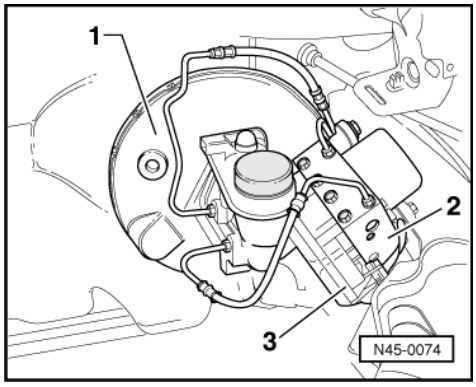

satelettronica

Left-hand drive

The brake servo boost is produced by vacuum pressure.

-> Distinguishing features:

1- 9" brake servo
2- Hydraulic unit
3- Control unit, 25 pin (bolted to hydraulic unit)

Right-hand drive

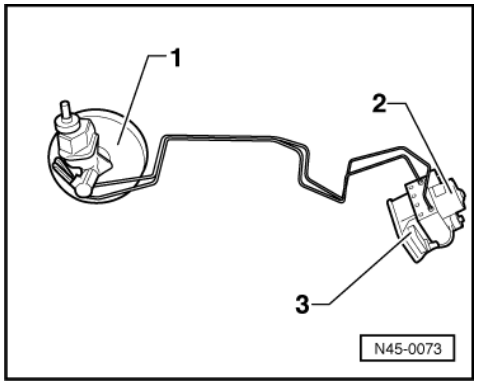

The brake servo boost is produced by vacuum pressure.

-> Distinguishing features:

1- 8" brake servo
2- Hydraulic unit
3- Control unit, 25 pin (bolted to hydraulic unit)

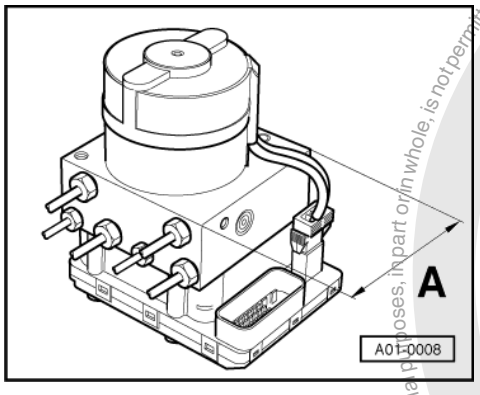

-> Distinguishing features of ABS and ABS/EDL - ITT Mark 20 GI and ITT Mark 20 IE hydraulic unit / left and right-hand drive

- Dimension -A- 100 mm vehicles with ABS
- Dimension -A- 130 mm vehicles with ABS/EDL

Protected by copyright. Copying for commercial purposes, in part or in whole, is not permitted unless authorised by Volkswagen AG. Volkswagen AG does not guarantee or accept any liability with respect to the correctness of information in this document. Copyright by Volkswagen AG.
satelettronica

6.4 - Technical data of self-diagnosis

Control unit identification

The version of the control unit is displayed once the fault reader V.A.G 1551 or the tester VAS 5051 has been connected and the control unit for brake electronics has been selected => Page 60 .

ABS system ITT Mark 20 GI

1J0 907 379 ABS

1J0 907 379 A ABS/EDL

ABS system ITT Mark 20 IE

1J0 907 379 D / G / P ABS

1J0 907 379 E / H / Q ABS/EDL

Fault memory

Permanent memory (fault memory) contents remain even without a supply voltage.

Data output takes place on fault reader V.A.G 1551 in operating mode 1 (rapid data transfer), and on tester VAS 5051 in operating mode "vehicle self-diagnosis".

6.5 - Safety precautions and fundamental points regarding fault finding

- The ABS is a vehicle safety system; the appropriate knowledge is necessary to work on the system.
- In order to check complaints and to be able to carry out pin-pointed fault finding, the fault memory must be interrogated before commencing work on the ABS system.
- Only separate connectors when the ignition is switched off.
- Observe the appropriate instructions regarding the handling of brake fluid.

=> Brake system; Repair group 47

=> Special Information, Running gear No. 21

- ABS faults are indicated by the ABS warning lamp lighting up; certain faults will only recognised at speeds above 20 km/h (approx. 13 mph) (carry out road test).
- If the ABS -K47- and the brake system -K118- warning lamps do not light up, but the brake system is not functioning correctly then the fault must be sought in the conventional braking system.
- Information on eliminating current defects

=> Technical Service Handbook.

Necessary technical information

Current flow diagrams, Electrical fault finding and Fitting locations binder
Workshop Manual Polo 1995 ▸ Brake systems
Workshop Manual Polo 1995 ▸ Running gear, axles, steering
Technical service handbook

Protected by copyright. Copyright by Volkswagen AG. Volkswagen AG does not guarantee or accept any liability with respect to the correctness of information in this document. Copyright by Volkswagen AG. Reproduction, in whole or in part, is not permitted unless authorised by Volkswagen AG. Volkswagen AG does not guarantee or accept any liability with respect to the correctness of information in this document. Copyright by Volkswagen AG.
satelettronica

6.6 - Fault finding with fault reader V.A.G 1551 or tester VAS 5051 on ABS and ABS/EDL, ITT Mark 20 GI and ITT Mark 20 IE (flow chart)

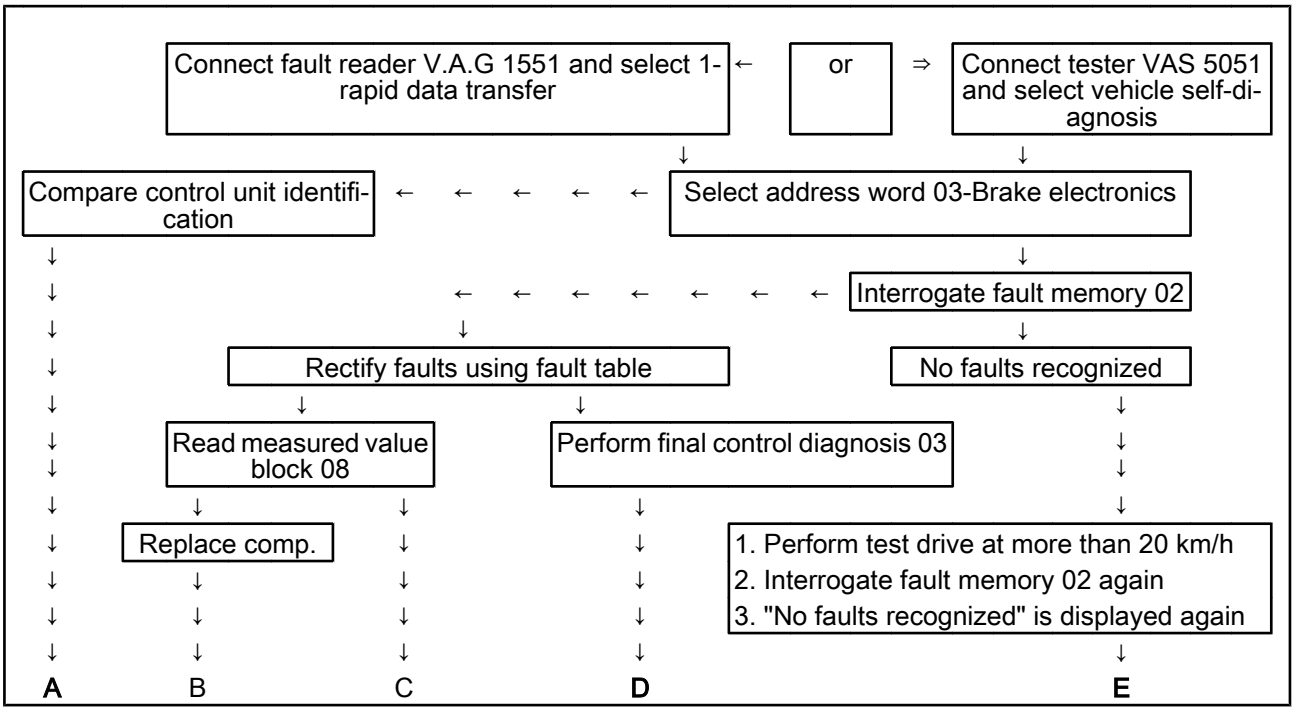

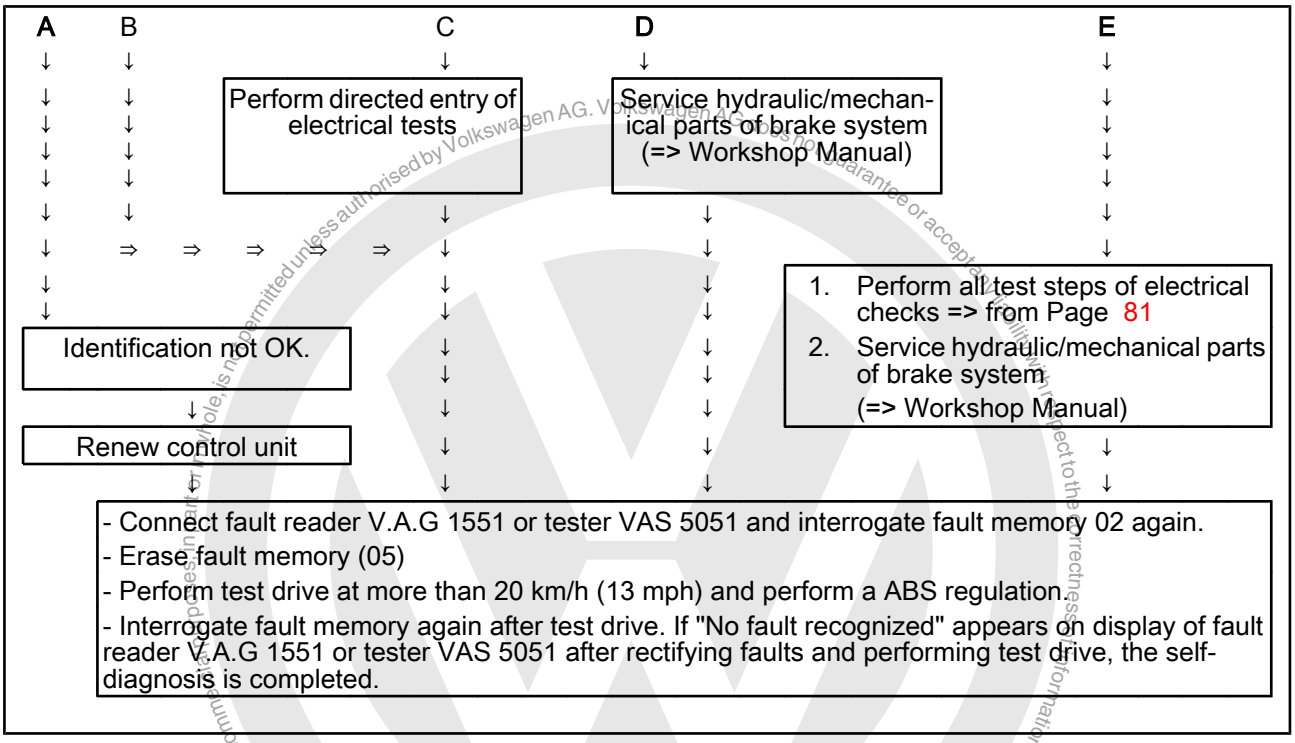

Protected by copyright. Copying for private or commercial purposes, in part or in whole, is not permitted unless authorised by Volkswagen AG. Volkswagen AG does not guarantee or accept any liability with respect to the correctness of information in this document. Copyright by Volkswagen AG.

satelettronica

7 - Electrical/electronic components and fitting locations

7.1 - Electrical/electronic components and fitting locations

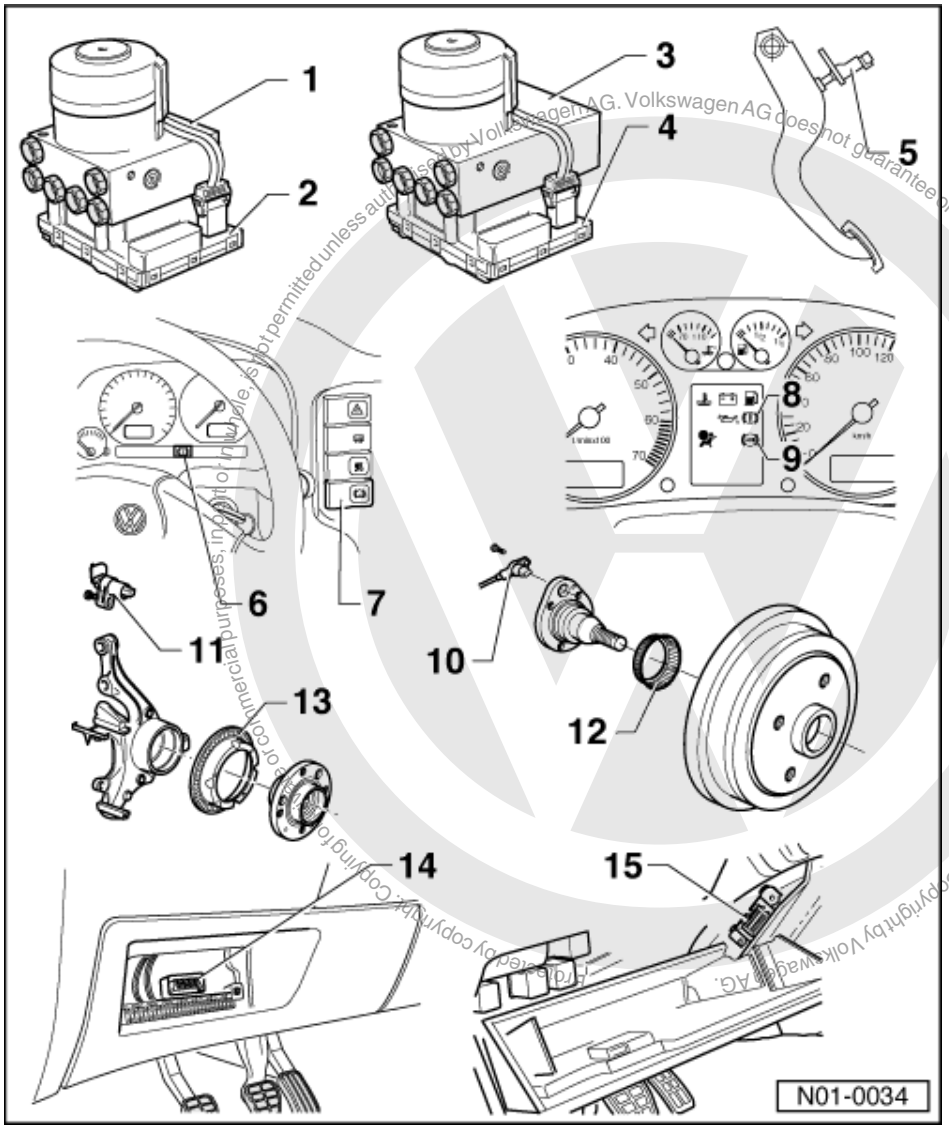

satelettronica

1 ABS hydraulic unit -N55

- Located on left of engine compartment.
- The hydraulic pump -V64- and the inlet/outlet valves in the hydraulic unit are checked by self-diagnosis
- The hydraulic pump -V64- and valve block must not be separated from one another
- Removing and installing

=> Brake systems; Repair group 45

- When changing the hydraulic unit, always seal the old part with the plugs from the repair set Part No. 1H0 698 311 A

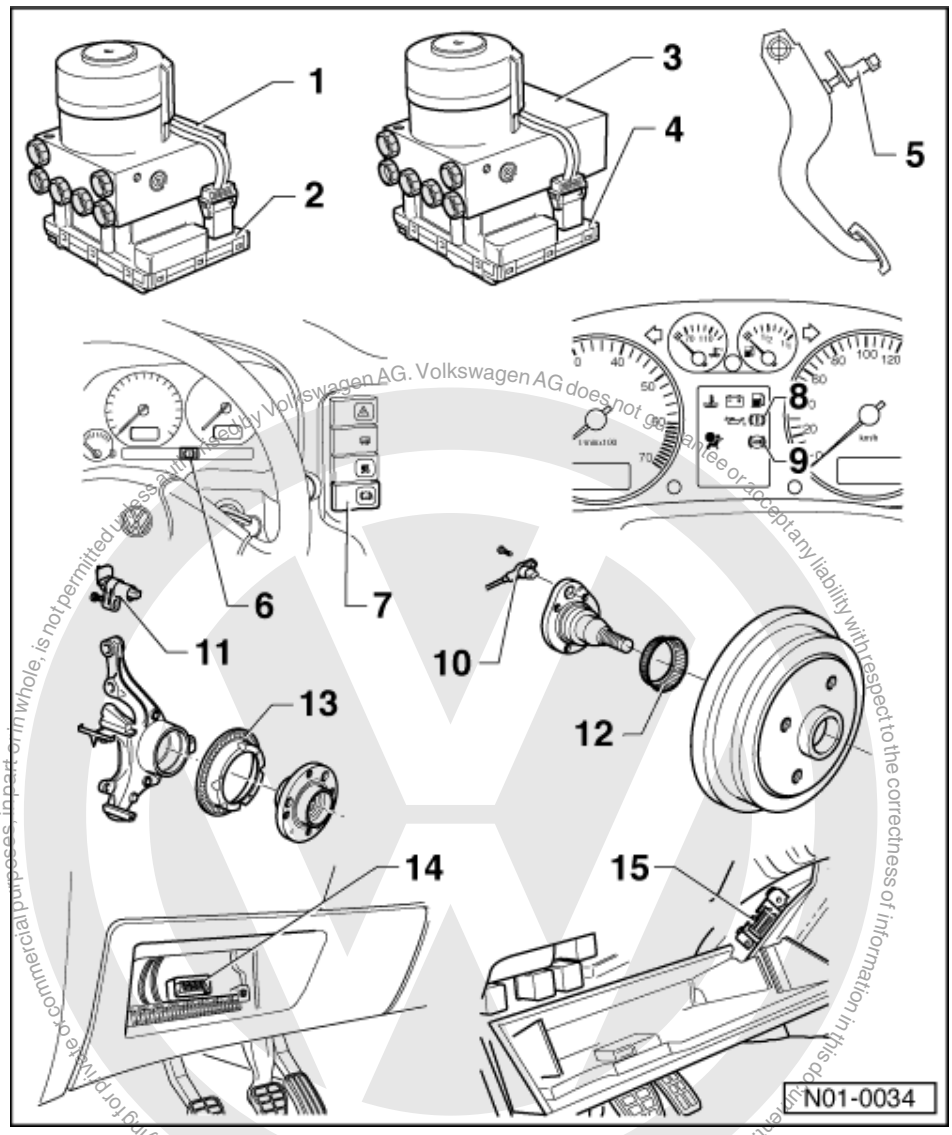

2 ABS control unit -J104

- Location: on hydraulic unit on left of engine compartment
- Checking the multi-pin connector to control unit =>Page 83
- Do not disconnect connector before successfully completing self-diagnosis. Switch ignition off before separating connection.

Protected by copyright. Copyright by Volkswagen AG. Volkswagen AG does not guarantee or accept any liability with respect to the correctness of information in this document. Copyright by Volkswagen AG. Copying for private or commercial purposes, in part or in whole, is not permitted unless authorised by Volkswagen AG.
satelettronica

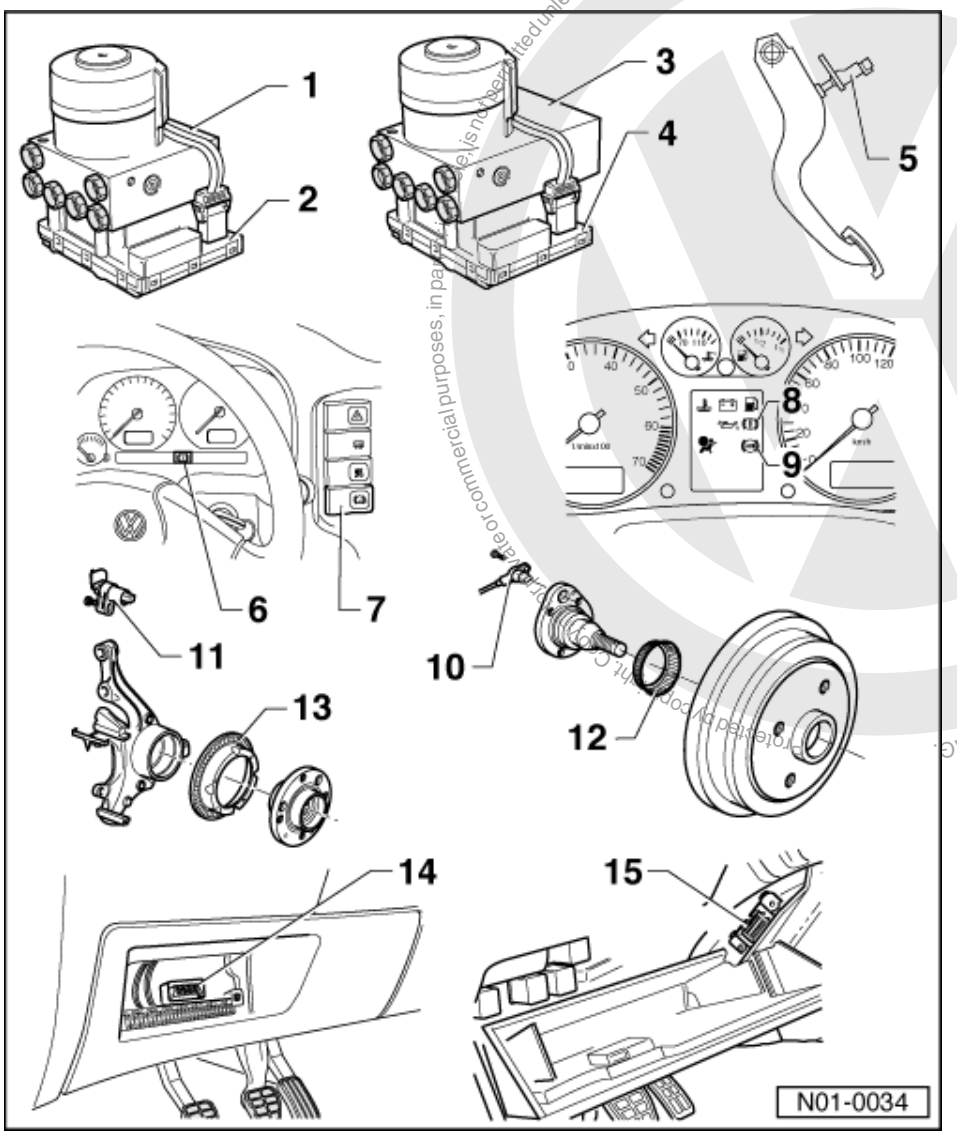

3 ABS/EDL hydraulic unit -N55

- Located on left of engine compartment.
- The hydraulic pump -V64- and the inlet/outlet valves in the hydraulic unit are checked by self-diagnosis
- The hydraulic pump -V64- and valve block must not be separated from one another
- Removing and installing

=> Brake systems; Repair group 45

- When changing the hydraulic unit, always seal the old part with the plugs from the repair set Part No. 1H0 698 311 A

Copyrighted by Volkswagen AG. Volkswagen AG does not guarantee or accept any liability with respect to the correctness of information in this document. Copyright by Volkswagen AG.
satelettronica

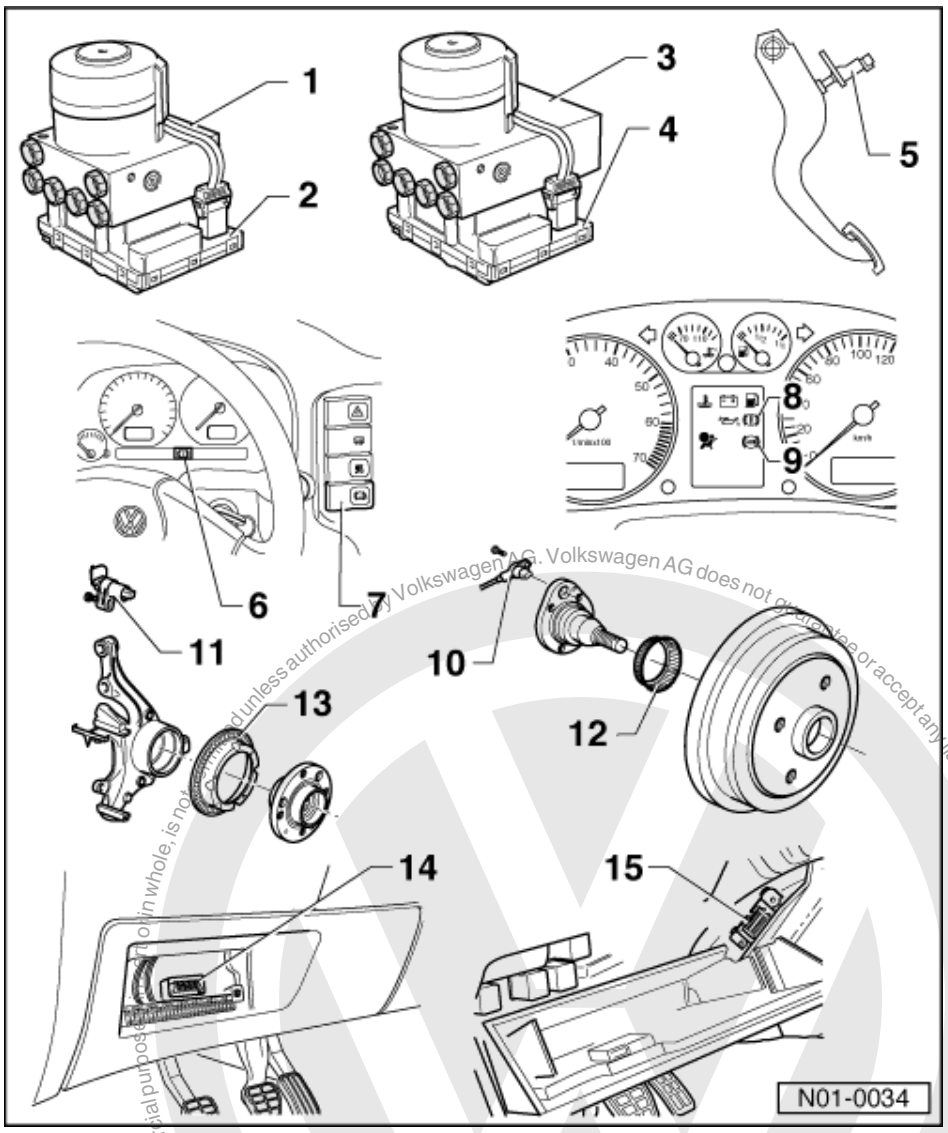

4 ABS/EDL control unit -J104

- Checked by self-diagnosis
- Located on the hydraulic unit on left of engine compartment.
- Checking the multi-pin connector to control unit
  =>Page 83
- Do not disconnect connector before successfully completing interrogation of fault memory. First switch ignition off then separate connector.

5 Brake light switch -F

- The brake light switch is open in the rest position;
- Can be checked via read measured value block => Page 73
- Adjusting

=> Brake system; Repair group 46; Brake pedal - Assembly overview; Adjusting brake light switch Brake pedal - Assembly overview Adjusting brake light switch

Protected by copyright. Copyright by Volkswagen AG. Volkswagen AG does not guarantee or accept any liability with respect to the correctness of information in this document. Copyright by Volkswagen AG. Reproduction in whole, is not permitted unless authorised by Volkswagen AG.
satelettronica

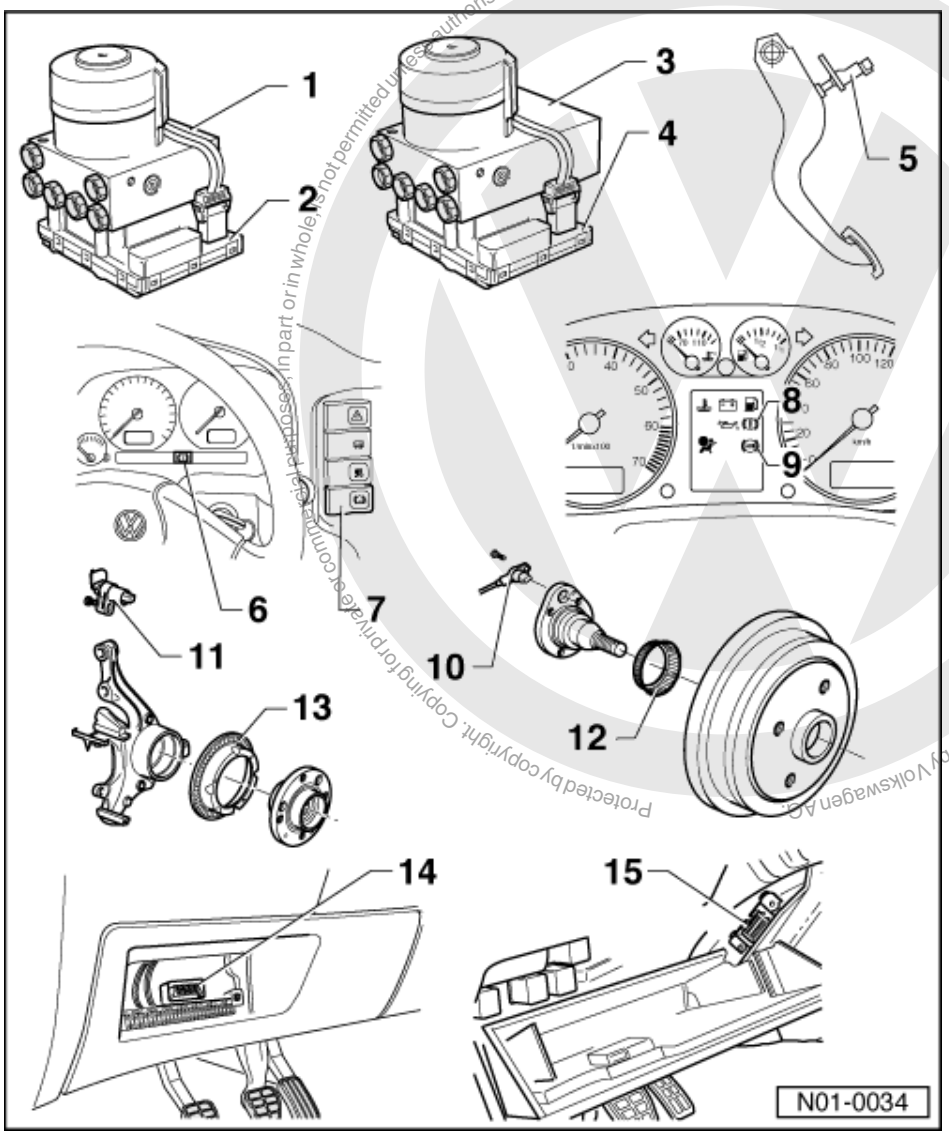

6 Brake system warning lamp -K118
- Location up to 04/97
  Function: =>Page 57

7 ABS warning lamp -K47
- Location up to 04/97
- LHD, on right of dash panel insert
- RHD, on left of dash panel insert
  Function: =>Page 57

8 Brake system warning lamp -K118
- Location from 05/97
  Function: =>Page 57

Protected by copyright. Copying for private or commercial purposes, in part or in whole, is not permitted unless authorised by Volkswagen AG. Volkswagen AG does not guarantee or accept any liability with respect to the correctness of information in this document. Copyright by Volkswagen AG.
satelettronica

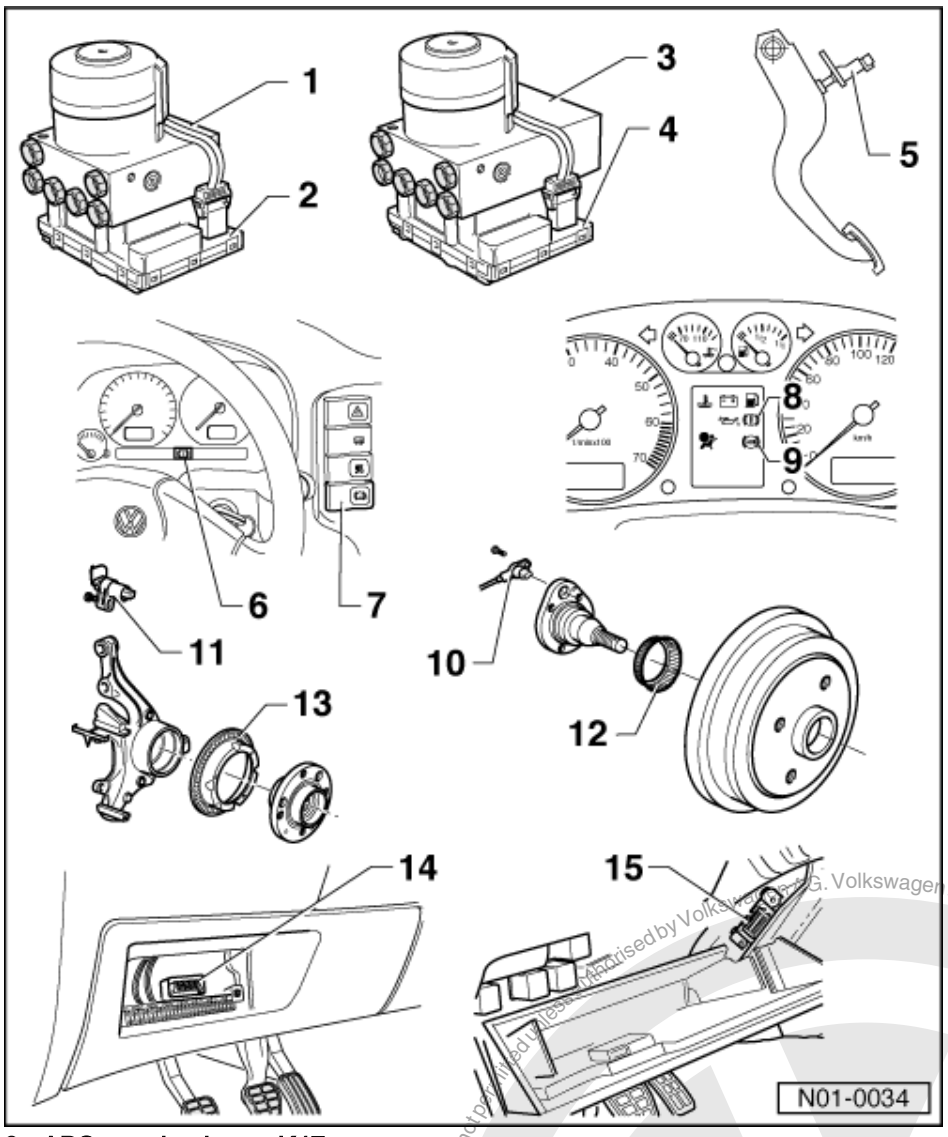

9 ABS warning lamp -K47

- Location from 05/97
  Function: =>Page 57

10 Rear right/left speed sensor -G44-/-G46

- Before inserting the sensor clean the inner surface of the sensor mounting and coat with lubricating paste G 000 650
- When connecting the speed sensor wire ensure it is not twisted in the wheel housing
- Securing bolt tightening torque
  - 10 Nm

Protected by copyright. Copying for private or commercial purposes, in part or in whole, is not permitted unless authorised by Volkswagen AG. Volkswagen AG does not guarantee or accept any liability with respect to the correctness of information in this document. Copyright by Volkswagen AG.
satelettronica

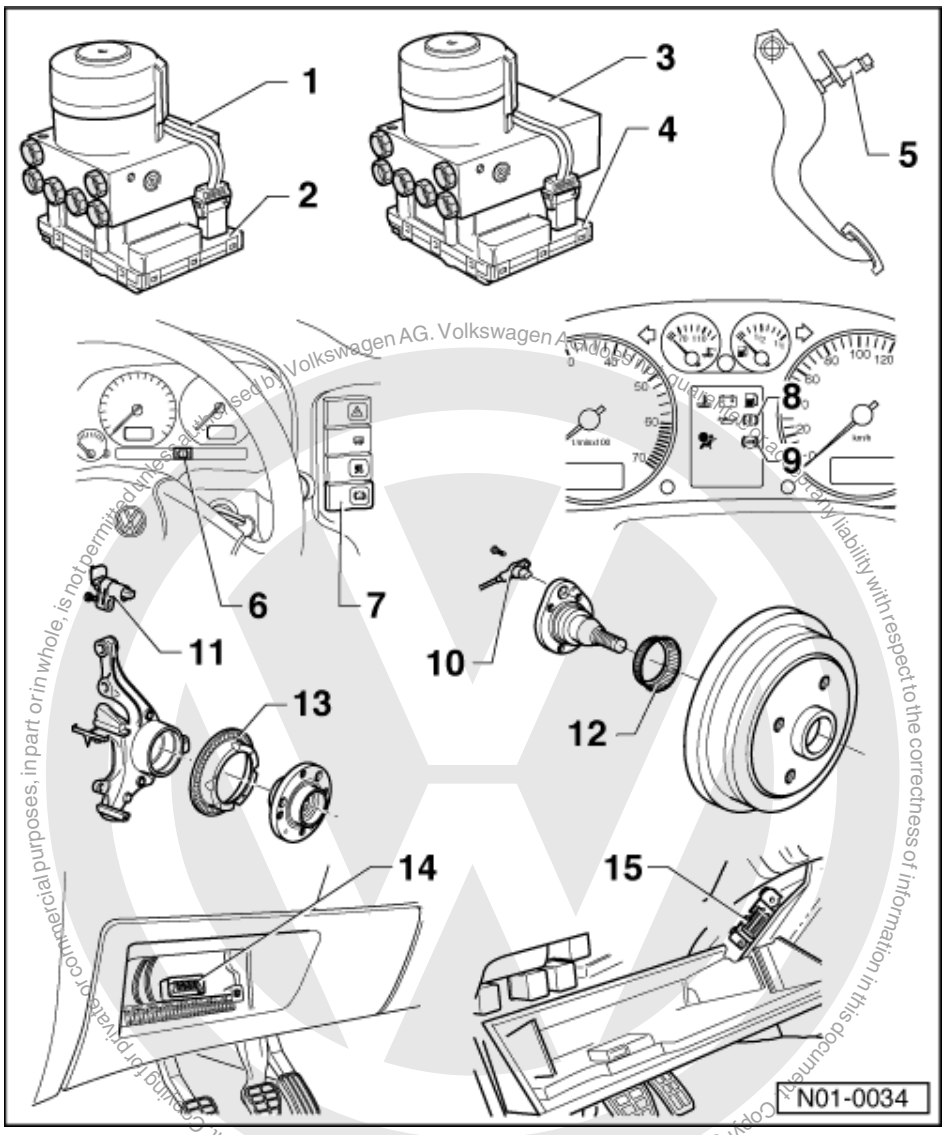

11 Front right/left speed sensor -G45-/-G47

- Before inserting the sensor clean the inner surface of the sensor mounting and coat with lubricating paste G 000 650
- When connecting the speed sensor wire ensure it is not twisted in the wheel housing
- Securing bolt tightening torque
  - 10 Nm

12 Rotor for speed sensor

- Rotor and speed senders for rear left and right-hand sides are identical
- Removing and installing

=> Running gear, axles, steering; Repair group Gr. 42; Servicing wheel bearings

satelettronica

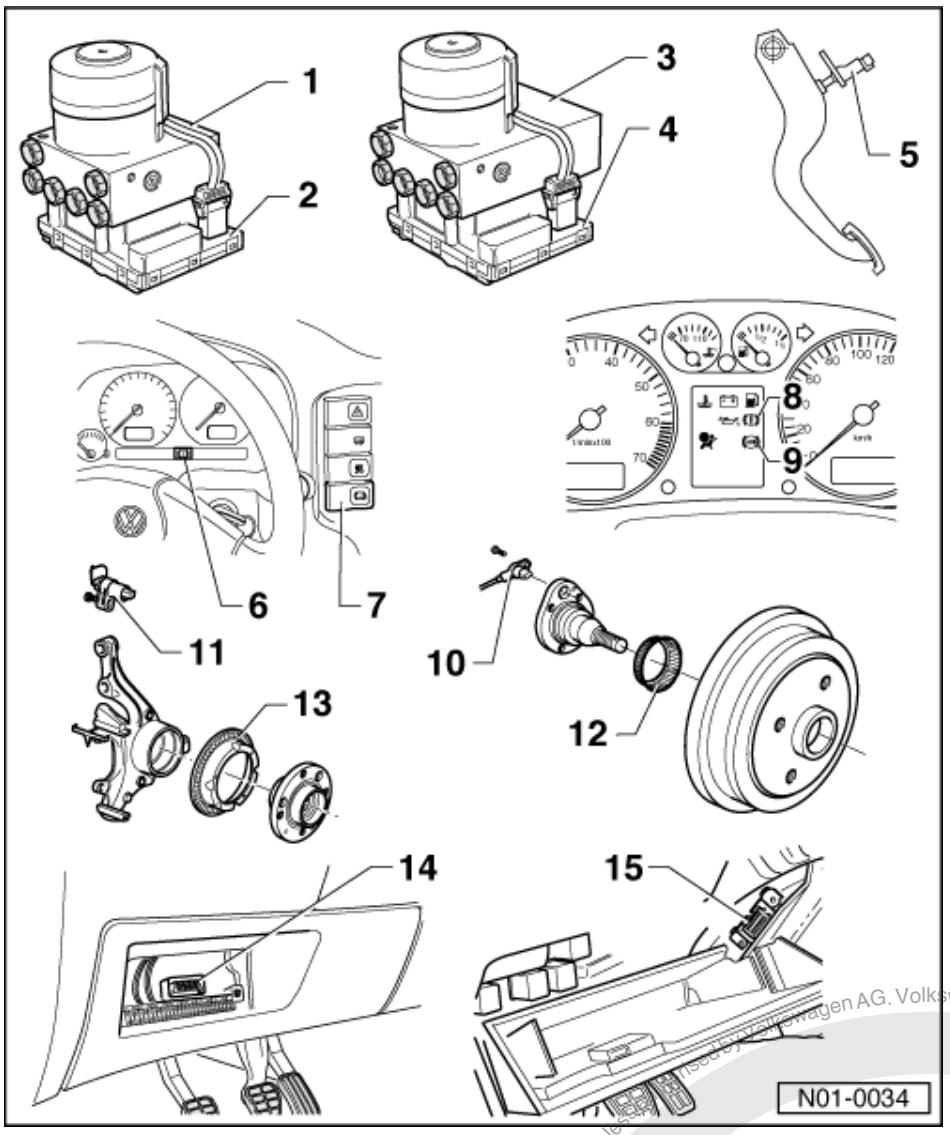

13 Rotor for speed sensor

- Rotor and speed senders for front left and right-hand sides are identical
- Removing and installing

=> Running gear, Axles, Steering; Repair group 40; Servicing front suspension Servicing front suspension

14 Diagnostic connections

- Location: Behind driver's side stowage compartment
- Location from 05/97

15 Diagnostic connections

- Location: Behind driver's side stowage compartment
- Location up to 04/97

Protected by copyright. Copying for private or commercial purposes, in part or in whole, is not permitted unless authorised by Volkswagen AG. Volkswagen AG does not guarantee or accept any liability with respect to the correctness of information in this document. Copyright by Volkswagen AG.
satelettronica

8 - Faults displayed by warning lamps K47 and K118

8.1 - Faults displayed by warning lamps K47 and K118

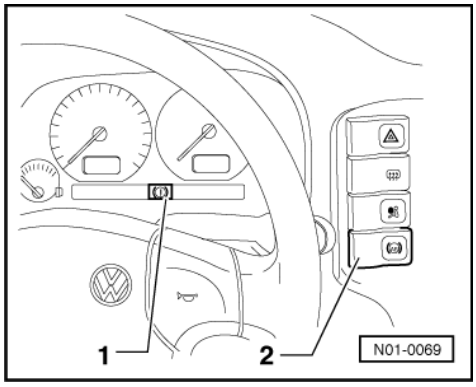

Illustration shows the arrangement of warning lamps on vehicles up to 04/97. Arrangement of warning lamps on vehicles from 05/97 =>Page 58

-> Warning lamps

Item	Designation
1	Brake system warning lamp -K118
2	ABS warning lamp -K47

Warning lamp K47

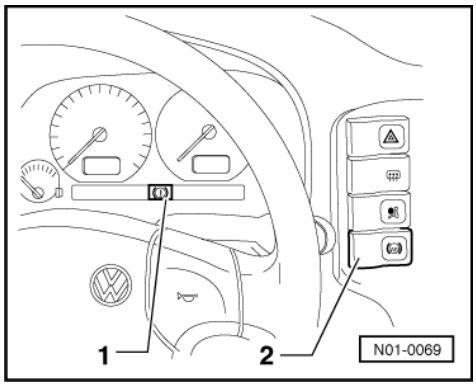

- -> If the ABS warning lamp -K47- -2- does not go out after switching ignition on and completion of test sequence then the fault may be:

  -a- Voltage supply is below 10 Volt
  -b- There is a fault in the ABS
  The anti-locking brake system remains switched off with an ABS fault -b-, but the brake system remains fully operational.
  -c- Since the last time the vehicle was started there was a temporary speed sensor fault.

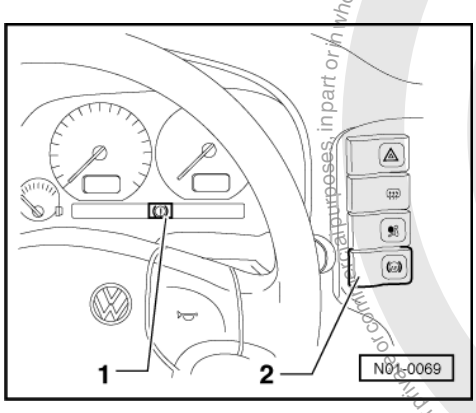

satelettronica
Protected by copyright. Copying for private or commercial purposes, in part or in whole, is not permitted unless authorised by Volkswagen AG. Volkswagen AG does not guarantee or accept any liability with respect to the correctness of information in this document. Copyright by Volkswagen AG.

In the case of a sensor fault -c-, the ABS warning lamp -K47- will extinguish after restarting the engine and attaining a speed of above 20 km/h (approx. 13 mph).

Warning lamps K47 and K118

- -> If the ABS warning lamp -K47- -2- goes out, but the brake system warning lamp -K118- remains on, then the fault may be:

  -a- The handbrake is applied..
  -b- There is a fault in the activation of the brake system warning lamp -K118.

=> Current flow diagrams, Electrical fault finding and Fitting locations binder

  -c- The brake fluid level is too low.

- If the ABS warning lamp -K47- -2- and the brake system warning lamp -K118- -1- light up, the ABS system is defective and the EBD (Electronic brake pressure distribution) is not functioning.

Warning!
After the ABS warning lamp -K47- and brake system warning lamp -K118- have lit up, it is possible that the rear wheels will lock-up earlier.

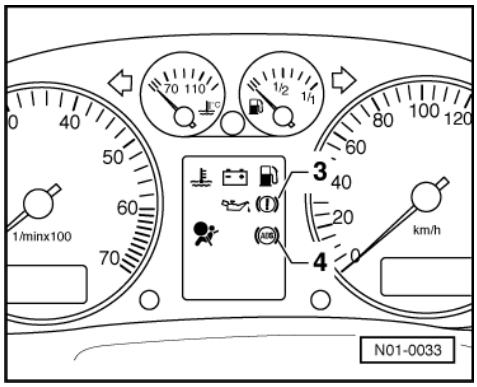

Illustration shows the arrangement of warning lamps on vehicles from 05/97.

-> Warning lamps

Item	Designation
3	Brake system warning lamp -K118
4	ABS warning lamp -K47

Warning lamp K47

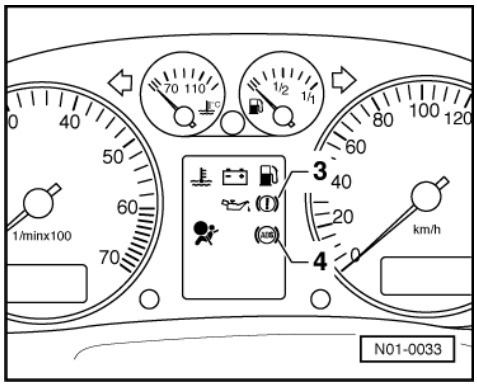

- -> If the ABS warning lamp -K47- -4- does not go out after ignition is switched on and test sequence is completed then the fault may be:

Protected by copyright. Copying for private or commercial purposes, in part or in whole, is not permitted unless authorised by Volkswagen AG. Volkswagen AG does not guarantee or accept any liability with respect to the correctness of information in this document. Copyright by Volkswagen AG.
satelitronica

-a- Voltage supply is below 10 Volt
-b- There is a fault in the ABS
The anti-locking brake system remains switched off with an ABS fault -b-, but the brake system remains fully operational.
-c- Since the last time the vehicle was started there was a temporary speed sensor fault.
In the case of a sensor fault -c-, the ABS warning lamp -K47- will extinguish after restarting the engine and attaining a speed of above 20 km/h (approx. 13 mph).

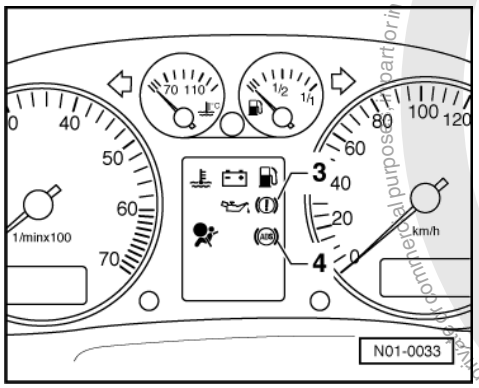

Warning lamps K47 and K118

- -> If the ABS warning lamp -K47- -4- goes out but the brake system warning lamp -K118- -3- remains on, then the fault may be:

  -a- The handbrake is applied..
  -b- There is a fault in the activation of the brake system warning lamp -K118.

=> Current flow diagrams, Electrical fault finding and Fitting locations binder

  -c- The brake fluid level is too low.

- If the ABS warning lamp -K47- -2- and the brake system warning lamp -K118- -1- light up, the ABS system is defective and the EBD (Electronic brake pressure distribution) is not functioning.

Warning! After the ABS warning lamp -K47- and brake system warning lamp -K118- have lit up, it is possible that the rear wheels will lock-up earlier.

Vehicles with ABS/EDL

Complaint: "Vehicle has no EDL function"

For this complaint a possible fault cause may be the brake light switch is incorrectly adjusted.

=> Brake system; Repair group 46; Brake pedal - Assembly overview; Adjusting brake light switch

A further possible fault cause may be the brake light switch is not functioning =>Read measured value block, Page 73 , display group number 3.

9 - Performing self diagnosis

9.1 - Performing self diagnosis

9.2 - Test prerequisites for self-diagnosis

- The tyres fitted to all wheels must be of the same (approved) size; tyres inflated to prescribed pressure.

Protected by copyright. Copying for private or commercial purposes, in part or in whole, is not permitted unless authorised by Volkswagen AG. Volkswagen AG does not guarantee or accept any liability with respect to the correctness of information in this document. Copyright by Volkswagen AG.
satelettronica

- Mechanical/hydraulic parts of the brake system including brake light switch and brake lights OK.
- Hydraulic pipes and connections not leaking (visual check of hydraulic unit, brake calipers, wheel cylinders, tandem master brake cylinder).
- Wheel bearings and wheel bearing play OK.
- Control unit -J104- is correctly bolted to hydraulic unit -N55.
- Connector on control unit -J104- correctly plugged-in (retainer is engaged).
- Check contacts of ABS components for damage and correct seating.
- All fuses according to current flow diagram OK (remove fuse from fuse holder to check).
- Supply voltage OK (at least 10.0 V).

9.3 - Safety precautions

Observe following if test and measuring instruments are required during a test drive:

- Test and measuring instruments must be secured to rear seat and operated by a 2nd person from this location.
- When test and measuring instruments are operated from the front passenger seat there is a danger that the person sitting there could be injured in an accident when the airbag is triggered.

9.4 - Connecting fault reader V.A.G 1551 and selecting function

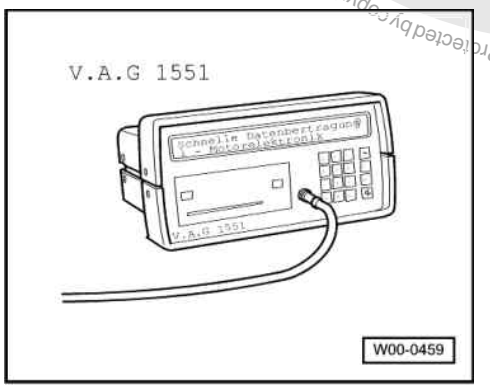

All functions which could previously be performed with V.A.G 1551 can also be performed with the new tester VAS 5051 in the operating mode "vehicle self-diagnosis":

Special tools and workshop equipment required

- V.A.G 1551 Fault reader or V.A.G 1552 vehicle system tester.

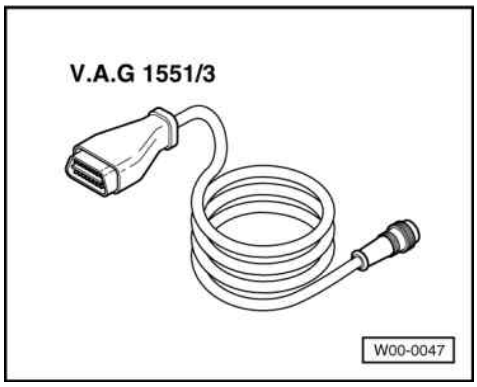

- V.A.G 1551/3 or 1551/3A Adapter cable

Protected by copyright. Copying for private or commercial purposes, in part or whole, is not permitted unless authorised by Volkswagen AG. Volkswagen AG does not guarantee or accept any liability with respect to the correctness of information in this document. Copyright by Volkswagen AG.
satelettronica

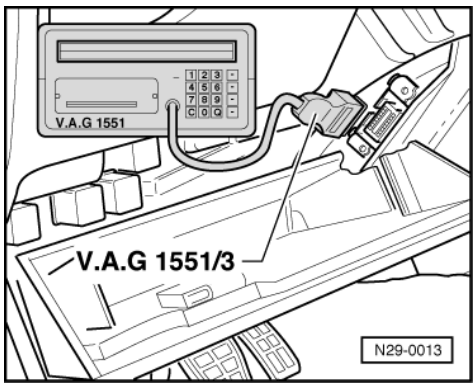

- The ABS function is switched off in the control unit during the self diagnosis.
- The fault memory can be erased after successful interrogation and repair.

- Open driver's side stowage compartment.

-> The illustration shows the diagnostic socket on vehicles up to 04/97.

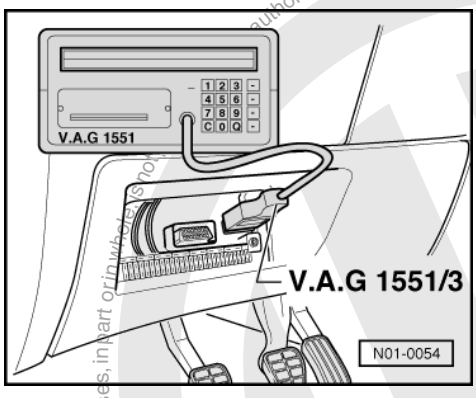

-> The illustration shows the diagnostic socket on vehicles from 05.97.

- With ignition switched off connect V.A.G 1551 using cable V.A.G 1551/3(A) to diagnostic socket.
- Connecting VAS 5051 => Page 63 .

-> Indicated on display:

```
V.A.G - SELF-DIAGNOSIS      HELP
1 - Rapid data transfer1)
2 - Flash code output1)
```

1) Is displayed alternately

If the display remains blank, check self-diagnosis connector, Electrical check, =>Page 81 , test steps 14 and 15

- Depending on the programme, additional operating information can be printed out by pressing the HELP key of V.A.G 1551.
- The ⇒key is used for moving forward within the programme
- The PRINT key is used for switching on the printer (warning lamp in key comes on).

- Switch on ignition.
- Switch on printer with the Print key (indicator lamp in key lights up).
- Press key -1- for "Rapid data transfer" operating mode.

-> Indicated on display:

```
Rapid data transfer      HELP
Enter address word XX
```

Protected by copyright. Copyright by Volkswagen AG. Volkswagen AG does not guarantee or accept any liability with respect to the correctness of information in this document. Copyright by Volkswagen AG. Unauthorised use, in part or in whole, is not permitted for commercial purposes.
satelettronica

- Press keys -0- and -3-; 03 inputs the address word of the vehicle system to be tested "Brake electronics".

-> Indicated on display

```
Rapid data transfer      Q
03 Brake electronics
```

- Confirm input with Q key.

-> And then the display shows e.g.:

```
1J0 907 379      ABS      ITT AE 20 GI
V00
Coding 05703      WSC XXXXX
```

Displayed is:

- The control unit identification number.

e.g. (1J0 907 379)

Allocation of control unit

=> Parts list

- System designation (ABS 20 GI)
- Control unit coding (05703).

Coding control unit =>Page 72

- Workshop code

=> Fault reader V.A.G 1551 operating instructions

If the control unit identification number does not appear
=> Summary of functions Page 64

- Press ⇒ key.

-> Indicated on display (select function, e.g. 02 - Interrogate fault memory).

```
Rapid data transfer      HELP
Select function XX
```

-> Indicated on display:

```
Rapid data transfer      HELP
Control unit does not answer!
```

- By pressing the HELP key, a list of possible fault causes is printed out.
- After eliminating the possible causes of faults, enter the address word 03 for "Brake electronics" again and confirm.

If "Control unit does not answer!" again appears:

-> Indicated on display:

```
Rapid data transfer      HELP
Control unit does not answer!
```

- Electrical check, => Page 81 , perform test steps 1, 2 and 3.

-> Control unit identification influenced during interrogation (possibly influenced from external sources?)

```
Rapid data transfer
No signal from control unit!
```

- Check diagnostic wire as well as voltage supply and earth connection for ABS control unit -J104-, Electrical check, =>Page 81 .

Protected by copyright. Copying for private or commercial purposes, in part or in whole, is not permitted unless authorised by Volkswagen AG. Volkswagen AG does not guarantee or accept any liability with respect to the correctness of information in this document. Copyright by Volkswagen AG.

satelettronica

- After rectifying the possible causes of the fault, enter the address word 03 for "Brake electronics" again and confirm with Q key.

9.5 - Connecting Vehicle Diagnosis, Testing and Information System VAS 5051 and selecting engine electronics control unit

All functions which could previously be performed with V.A.G 1551 can also be performed with the new tester VAS 5051 in the operating mode "vehicle self-diagnosis".

=> Operating instructions for Vehicle Diagnosis, Testing and Information System VAS 5051.

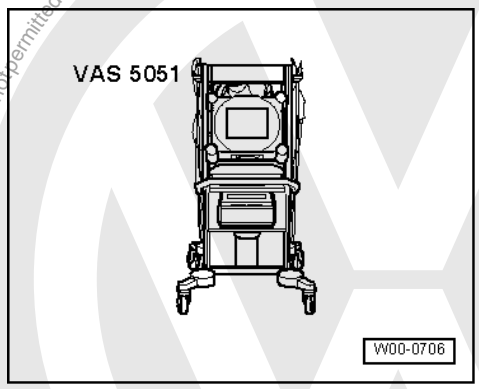

Special tools, workshop equipment, testers, measuring instruments and auxiliary items required

- VAS 5051 Vehicle Diagnosis, Testing and Information System

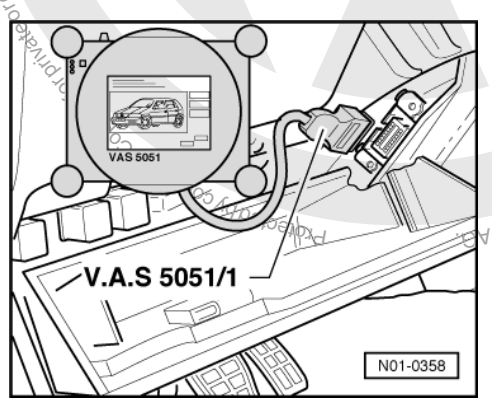

- The ABS function is switched off in the control unit during the self diagnosis.
- The fault memory can be erased after successful interrogation and repair.

- Open driver's side stowage compartment.

-> The illustration shows the diagnostic socket on vehicles up to 04/97.

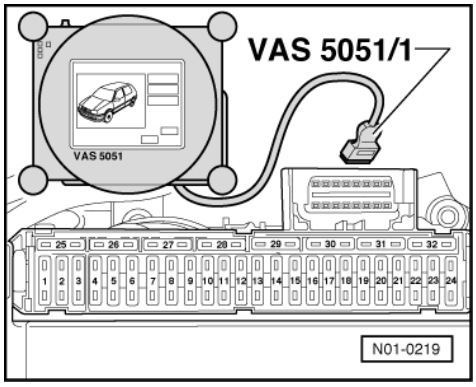

satelettronica

-> The illustration shows the diagnostic socket on vehicles from 05.97.

- With ignition switched off, connect tester VAS 5051 to diagnosis connection using diagnosis cable VAS 5051/1 or VAS 5051/3.

◆ In the functions 04 - Basic setting/08 - Read data block, the display zones will be listed from top to bottom.
◆ If the display does not indicate as described in the work sequence:

=> Operating instructions for Vehicle Diagnosis, Testing and Information System VAS 5051.

9.6 - List of selectable functions

	Page
00 - Automatic test sequence	16
01 - Interrogate control unit version =>Connecting fault reader V.A.G 1551 and selecting functions	60
01 - Interrogate control unit version => Connecting tester VAS 5051 and selecting functions	63
02 - Interrogate fault memory	64
03 - Final control diagnosis	27
04 - Initiate basic setting1)	76
05 - Erase fault memory	71
06 - End output	71
07 - Code control unit	72
08 - Read measured value block	73

1) The basic setting is only necessary if at least one chamber of the brake fluid reservoir has completely run dry.

9.7 - Interrogating fault memory

◆ All functions that have so far been carried out with V.A.G 1551 can now also be carried out with the tester VAS 5051.

-> Indicated on display:

```
Rapid data transfer      HELP
Select function XX
```

- Press keys 0 and 2; 02 enters the "Interrogate fault memory" function.

-> Indicated on display:

```
Rapid data transfer      Q
02 - Interrogate fault memory
```

- Confirm entry with Q key.

-> The number of faults stored or "No fault recognised" will be displayed.

```
X Faults recognised!
```

-> The number of stored faults or "No fault recognised" appears in the display.

```
X Faults recognised!
```

- Press ⇒ key.

Protected by copyright. Copying for private or commercial purposes, in whole, is not permitted unless authorised by Volkswagen AG. Volkswagen AG does not guarantee or accept any liability with respect to the correctness of information in this document. Copyright by Volkswagen AG.
satelettronica

The stored faults are displayed and printed out one after the other.

- With fault information print-out eliminate fault according to fault table, Page 65 .

As with "No fault recognised", the programme returns to the start position after pressing the ⇒key:

-> Indicated on display:

```
Rapid data transfer      HELP
Select function XX
```

- End output (Function 06) => Page 71 .
- Switch off ignition and unplug diagnostic connectors.

Work sequence if a fault has been detected:

1. Rectify fault according to fault table, Page 65
2. Interrogate fault memory (Function 02)
3. Erase fault memory (Function 05)
4. End output (Function 06)
5. Perform a test drive
6. Interrogate fault memory again

9.8 - Fault table

Notes on fault table

- When commencing fault finding of the vehicle control units, always start with function "Automatic test sequence" by pressing keys 0 and 0. This interrogates the fault memories of the control units in the vehicle.
- All the possible faults which can be recognised by the ABS control unit -J104- and printed-out on V.A.G 1551 or VAS 5051, are listed on the following pages according to the 5 digit fault code.
- Fault code appears (in the "Rapid data transfer" mode) only on the print-out.

Example:	
Fault code	Fault type code
5 digit	3 digit
00283	035

- The 3 digit fault type code is a data code and may be disregarded, but the fault type text is of use.
- Before replacing components indicated as being faulty, check all the appropriate connectors, wiring and earth connections using the current flow diagram =>Current flow diagrams, Electrical fault finding and Fitting locations binder.
- On completion of repairs always interrogate the fault memory with fault reader V.A.G 1551 or the new tester VAS 5051 and erase.
- Carry out road test exceeding 20 km/h (13 mph).
- After the road test interrogate fault memory again.

V.A.G 1551 print-out	Possible cause of fault	Rectifying fault
No fault recognised	If "No fault recognised" appears after carrying out repairs, self diagnosis is ended. If, despite "No fault recognised" appearing in the display, the ABS system does not function properly, then proceed as follows: 1. Carry out road test exceeding 20 km/h (13 mph), 2. Again interrogate fault memory, if there is still no fault stored,	

Protected by copyright. Copying for private or commercial purposes, in part or in whole, is not permitted unless authorised by Volkswagen AG. Volkswagen AG does not guarantee or accept any liability with respect to the correctness of information in this document. Copyright by Volkswagen AG.

satelettronica

V.A.G 1551 print-out	Possible cause of fault	Rectifying fault
	3. Continue fault finding without self-diagnosis and work through the complete Electrical check => Page 81 .	

V.A.G 1551 print-out	Possible cause of fault	Rectifying fault
00283 Front left speed sensor -G47	- Open circuit, short to positive or earth, or loose contact in connections between speed sensor -G47- and control unit -J104 - Damaged rotor or speed sensor -G47 - Speed sensor windings -G47- defective - ABS control unit -J104- defective	- Check wiring and connections using current flow diagram Perform electrical checks =>from page 81 - Check speed sensor -G47- and rotor for damage Renew rotor/speed sensor -G47 => Brake systems; Repair group 45; Removing and installing parts of ABS system on front and rear axles Removing and installing parts of ABS system on front and rear axles If the fault occurs again: - Renew control unit -J104 => Brake systems; Repair group 45

V.A.G 1551 print-out	Possible cause of fault	Rectifying fault
00283 Front left speed sensor -G47 Signal outside tolerances1)	- Open circuit, short to positive or earth, or loose contact in connections between speed sensor -G47 and control unit -J104 - Electrical interference from other sources (high frequency radiation e.g. non-insulated ignition cable) - Damaged rotor or speed sensor -G47 - Excessive air gap between speed sensor -G47- and rotor (signal not OK.)	- Check wiring and connections using current flow diagram Perform electrical checks =>from page 81 - Read measured value block =>Page 73 Display group number 001 - Check speed sensor -G47- and rotor for damage Renew rotor/speed sensor => Brake systems; Repair group 45; Removing and installing parts of ABS system on front and rear axles Removing and installing parts of ABS system on front and rear axles

1) Type of fault, this fault is only recognised above 20 km/h (13 mph) (carry out test drive).

V.A.G 1551 print-out	Possible cause of fault	Rectifying fault
00283 Front left speed sensor -G47 Mechanical fault1)	- Excessive air gap between speed sensor -G47- and rotor (signal not OK.) - Outlet valve in hydraulic unit -N55- defective	- Check installation of speed sensor -G47- and rotor => Brake systems; Repair group 45; Removing and installing parts of ABS system on front and rear axles 27 If the fault occurs again: - Renew hydraulic unit -N55

satelettronica

V.A.G 1551 print-out	Possible cause of fault	Rectifying fault
		=> Brake systems; Repair group 45

1) Type of fault, this fault is only recognised above 20 km/h (13 mph) (carry out test drive).

V.A.G 1551 print-out	Possible cause of fault	Rectifying fault
00285 Front right speed sensor -G45	- Open circuit, short to positive or earth, or loose contact in connections between speed sensor -G45- and control unit -J104 - Damaged rotor or speed sensor -G45 - Speed sensor windings -G45- defective - ABS control unit -J104- defective	- Check wiring and connections using current flow diagram Perform electrical checks =>from Page 81 - Check speed sensor -G45- and rotor for damage Renew rotor/speed sensor -G45 => Brake systems; Repair group 45; Removing and installing parts of ABS system on front and rear axles Removing and installing parts of ABS system on front and rear axles If the fault occurs again: - Renew control unit -J104 => Brake systems; Repair group 45

V.A.G 1551 print-out	Possible cause of fault	Rectifying fault
00285 Front right speed sensor -G45 Signal outside tolerances1)	- Open circuit, short to positive or earth, or loose contact in connections between speed sensor -G45- and control unit -J104 - Electrical interference from other sources (high frequency radiation e.g. non-insulated ignition cable) - Damaged rotor or speed sensor -G45 - Excessive air gap between speed sensor -G45- and rotor (signal not OK.)	- Check wiring and connections using current flow diagram Perform electrical checks =>from page 81 - Read measured value block =>Page 73 Display group number 001 - Check speed sensor -G45- and rotor for damage Renew rotor/speed sensor => Brake systems; Repair group 45; Removing and installing parts of ABS system on front and rear axles Removing and installing parts of ABS system on front and rear axles

1) Type of fault, this fault is only recognised above 20 km/h (13 mph) (carry out test drive).

V.A.G 1551 print-out	Possible cause of fault	Rectifying fault
00285 Front right speed sensor -G45 Mechanical fault1)	- Excessive air gap between speed sensor -G45- and rotor (signal not OK.) - Outlet valve in hydraulic unit -N55- defective	- Check installation of speed sensor -G45- and rotor => Brake systems; Repair group 45; Removing and installing parts of ABS system on front and rear axles 27 If the fault occurs again: - Renew hydraulic unit -N55

satelettronica

V.A.G 1551 print-out	Possible cause of fault	Rectifying fault
		=> Brake systems; Repair group 45

1) Type of fault, this fault is only recognised above 20 km/h (13 mph) (carry out test drive).

V.A.G 1551 print-out	Possible cause of fault	Rectifying fault
00287 Rear right speed sensor -G44	- Open circuit, short to positive or earth, or loose contact in connections between speed sensor -G44- and control unit -J104 - Damaged rotor or speed sensor -G44 - Speed sensor windings -G44- defective - ABS control unit -J104- defective	- Check wiring and connections using current flow diagram Perform electrical checks =>from page 81 - Check speed sensor -G44- and rotor for damage Renew rotor/speed sensor -G44 => Brake systems; Repair group 45; Removing and installing parts of ABS system on front and rear axles Removing and installing parts of ABS system on front and rear axles If the fault occurs again: - Renew control unit -J104 => Brake systems; Repair group 45

V.A.G 1551 print-out	Possible cause of fault	Rectifying fault
00287 Rear right speed sensor -G44 Signal outside tolerances1)	- Open circuit, short to positive or earth, or loose contact in connections between speed sensor -G44- and control unit -J104 - Electrical interference from other sources (high frequency radiation e.g. non-insulated ignition cable) - Damaged rotor or speed sensor -G44 - Excessive air gap between speed sensor -G44- and rotor (signal not OK.)	- Check wiring and connections using current flow diagram Perform electrical checks =>from page 81 - Read measured value block =>Page 73 Display group number 001 - Check speed sensor -G44- and rotor for damage Renew rotor/speed sensor => Brake systems; Repair group 45; Removing and installing parts of ABS system on front and rear axles Removing and installing parts of ABS system on front and rear axles

1) Type of fault, this fault is only recognised above 20 km/h (13 mph) (carry out test drive).

V.A.G 1551 print-out	Possible cause of fault	Rectifying fault
00287 Rear right speed sensor -G44 Mechanical fault1)	- Excessive air gap between speed sensor -G44- and rotor (signal not OK.) - Outlet valve in hydraulic unit -N55- defective	- Check installation of speed sensor -G44- and rotor => Brake systems; Repair group 45; Removing and installing parts of ABS system on front and rear axles 27 If the fault occurs again: - Renew hydraulic unit -N55

satelettronica

V.A.G 1551 print-out	Possible cause of fault	Rectifying fault
		=> Brake systems; Repair group 45

1) Type of fault, this fault is only recognised above 20 km/h (13 mph) (carry out test drive).

V.A.G 1551 print-out	Possible cause of fault	Rectifying fault
00290 Rear left speed sensor -G46	- Open circuit, short to positive or earth, or loose contact in connections between speed sensor -G46- and control unit -J104 - Speed sensor windings -G46- defective - Damaged rotor or speed sensor -G46 - ABS control unit -J104- defective	- Check wiring and connections using current flow diagram Perform electrical checks =>from Page 81 - Check speed sensor -G46- and rotor for damage Renew rotor/speed sensor -G46 => Brake systems; Repair group 45; Removing and installing parts of ABS system on front and rear axles Removing and installing parts of ABS system on front and rear axles If the fault occurs again: - Renew control unit -J104 => Brake systems; Repair group 45

V.A.G 1551 print-out	Possible cause of fault	Rectifying fault
00290 Rear left speed sensor -G46 Signal outside tolerances1)	- Open circuit, short to positive or earth, or loose contact in connections between speed sensor -G46- and control unit -J104 - Electrical interference from other sources (high frequency radiation e.g. non-insulated ignition cable) - Damaged rotor or speed sensor -G46 - Excessive air gap between speed sensor -G46- and rotor (signal not OK.)	- Check wiring and connections using current flow diagram Perform electrical checks =>from Page 81 - Read measured value block =>Page 73 Display group number 001 - Check speed sensor -G46- and rotor for damage Renew rotor/speed sensor => Brake systems; Repair group 45; Removing and installing parts of ABS system on front and rear axles Removing and installing parts of ABS system on front and rear axles

1) Type of fault, this fault is only recognised above 20 km/h (13 mph) (carry out test drive).

V.A.G 1551 print-out	Possible cause of fault	Rectifying fault
00290 Rear left speed sensor -G46 Mechanical fault1)	- Excessive air gap between speed sensor -G46- and rotor (signal not OK.) - Outlet valve in hydraulic unit -N55- defective	- Check installation of speed sensor -G46- and rotor => Brake systems; Repair group 45; Removing and installing parts of ABS system on front and rear axles 27 If the fault occurs again: - Renew hydraulic unit -N55

satelettronica
Copyright by Volkswagen AG. Volkswagen AG does not guarantee or accept any liability with respect to the correctness of information in this document. Copyright by Volkswagen AG. Protected by copyright. Copying for private or commercial purposes, in whole or in part, is not permitted unless authorised by Volkswagen AG.

V.A.G 1551 print-out	Possible cause of fault	Rectifying fault
		=> Brake systems; Repair group 45

1) Type of fault, this fault is only recognised above 20 km/h (13 mph) (carry out test drive).

V.A.G 1551 print-out	Possible cause of fault	Rectifying fault
00668 Vehicle voltage terminal 30 Signal outside tolerances	- Open circuit, short to positive or earth in the wiring	- Check wiring and connections using current flow diagram - Perform electrical checks =>from Page 81
01044 Control unit incorrectly coded	- Control unit -J104- incorrectly coded - Coding bridge in multi-pin connector to control unit -J104- open or short circuit	- Check coding for control unit -J104- =>Page 72 - Check wiring and connections using current flow diagram - Perform electrical checks =>from Page 81

V.A.G 1551 print-out	Possible cause of fault	Rectifying fault
01130 ABS operation Implausible signal1)	- Electrical interference from other sources (high frequency radiation e.g. non-insulated ignition cable) - Open circuit, short to positive or earth in the wiring - ABS control unit -J104- defective	- Erase fault memory Perform test drive at more than 20 km/h (13 mph) Interrogate fault memory again - Check wiring and connections using current flow diagram - Perform electrical checks =>from Page 81 If the fault occurs again: - Renew control unit -J104 => Brake systems; Repair group 45

1) Type of fault, this fault is only recognised above 20 km/h (13 mph) (carry out test drive).

V.A.G 1551 print-out	Possible cause of fault	Rectifying fault
01276 ABS hydraulic pump -V64 Signal outside tolerances1)	- Hydraulic pump connection -V64- to control unit - Open circuit, short to positive or earth in the wiring - Hydraulic pump -V64- defective - ABS control unit -J104- defective	- Perform final control diagnosis => Page 27 - Check wiring and connections using current flow diagram - Perform electrical checks =>from Page 81 - If hydraulic pump -V64- runs fault-free when test step No. 18 of electrical check is performed => Page 81 , the control unit -J104- must be renewed. - Renew control unit -J104 => Brake systems; Repair group 45

1) Type of fault, this fault is only recognised above 20 km/h (13 mph) (carry out test drive).

Protected by copyright. Copying for private or commercial purposes, in part or in whole, is not permitted unless authorised by Volkswagen AG. Volkswagen AG does not guarantee or accept any liability with respect to the correctness of information in this document. Copyright by Volkswagen AG.

satelettronica

65535 Control unit defective	ABS control unit -J104- defective	- Renew control unit -J104 => Brake systems; Repair group 45

9.9 - Erasing fault memory, ending output

- All functions that have so far been carried out with V.A.G 1551 can now also be carried out with the tester VAS 5051.

Prerequisites:

- Fault memory interrogated => Page 64 .

1. Erasing fault memory

- Press ⇒ key.

-> Indicated on display:

```
Rapid data transfer      HELP
Select function XX
```

- Press keys 0 and 5; 05 enters the "Erase fault memory" function.

-> Indicated on display:

```
Rapid data transfer      Q
05 Erase fault memory
```

- Confirm entry with Q key

-> Indicated on display:

```
Rapid data transfer
Fault memory is erased!
```

- Press ⇒ key.

-> Indicated on display:

```
Rapid data transfer     HELP
Select function XX
```

-> Indicated on display:

```
Warning!
Fault memory was not interrogated.
```

- Adhere exactly to test sequence: First interrogate fault memory, then erase

2. Ending output

- Press keys 0 and 6, this ends the output.

-> Indicated on display

```
Rapid data transfer      Q
06 - End output
```

- Confirm input with Q key.

-> Indicated on display:

```
Rapid data transfer     HELP
Select function XX
```

Protected by copyright. Copying for private or commercial purposes, in part or in whole, is not permitted unless authorised by Volkswagen AG. Volkswagen AG does not guarantee or accept any liability with respect to the correctness of information in this document. Copyright by Volkswagen AG.
satelettronica

- Switch off ignition.
- Disconnect connection to fault reader V.A.G 1551
- Switch on ignition.

ABS warning lamp -K47- must go out after approx. 2 seconds.

9.10 - Coding control unit

- All functions that have so far been carried out with V.A.G 1551 can now also be carried out with the tester VAS 5051.
- Warning lamps for ABS -K47- and for brake system -K118- flash when control unit is coded with 00000. An entry is not set in the fault memory.
- The control unit -J104- must be recoded if the vehicle relevant coding is not displayed or the control unit has been renewed.

Coding is only possible after the workshop code (WSC) has been entered into V.A.G 1551.

Work sequence

- Connect fault reader V.A.G 1551 and select (address word 03) "Brake electronics" with ignition switched on; => Page 60

-> Indicated on display:

```
Rapid data transfer      HELP
Select function XX
```

- Input 07 for the function "Code control unit" and confirm with Q.

-> Indicated on display

```
Rapid data transfer      HELP
07 - Code control unit
```

- Confirm input with Q key.

-> Indicated on display

```
Code control unit
Enter code number      XXXXX     (0-32000)
```

- Enter the relevant code number for this vehicle and confirm with Q key.

ABS system ITT Mark 20GI

Code number	Vehicle type
01901	Polo 1995 ▸ from 09/94
05703	Polo 1995 ▸ from 05/97

ABS system ITT Mark 20IE

Code number	Vehicle type
05703	Polo 1995 ▸ from 07/97

ABS/EDL system ITT Mark 20IE

Code number	Vehicle type
15703	Polo 1995 ▸ from 07/97

-> The control unit coding appears on the display of the fault reader V.A.G 1551, e.g.:

```
     "     Coding 01901     WSC XXXXX
```

Copyright by Volkswagen AG. Volkswagen AG does not guarantee or accept any liability with respect to the correctness of information in this document. Copyright by Volkswagen AG. Reproduction, copying, distribution, or publication of whole or in part for commercial purposes is not permitted unless authorised by Volkswagen AG.
satelettronica

9.11 - Read measured value block

- All functions that have so far been carried out with V.A.G 1551 can now also be carried out with the tester VAS 5051.

The control unit can transfer a considerable amount of test data. This test data delivers information on the operational condition of the system and/or sensors connected to it. In many cases the transferred test data supports fault finding and fault rectification. The test data has been summarized into single display groups because all the information cannot be evaluated at the same time. The information can be selected via display group numbers.

Safety measures

Note!
-
-
-

- Connect fault reader V.A.G 1551 and select (address word 03) "Brake electronics control unit" with ignition switched on; => Page 60

-> Indicated on display:

```
Rapid data transfer       HELP
Select function XX
```

- Press keys 0 and 8. (The function "Read measured value block" is initiated with 08.)

-> Indicated on display:

```
Rapid data transfer       Q
08 - Read measured value block
```

- Confirm entry with key Q.

-> Indicated on display:

```
Read measured value block
Enter display group number XXX
```

- Enter display group number => List of selectable display group numbers, Page 73 .

List of selectable display group numbers

Display group number	Display zone	Designation
001	1	Wheel speed at front left wheel sensor (km/h)
	2	Wheel speed at front right wheel sensor (km/h)
	3	Wheel speed at rear left speed sensor (km/h)
	4	Wheel speed at rear right speed sensor (km/h)
002	1	Wheel speed at front left speed sensor (km/h)
	2	Wheel speed at front right wheel sensor (km/h)
	3	Wheel speed at rear left speed sensor (km/h)
	4	Wheel speed at rear right speed sensor (km/h)
003	1	Brake light switch
	2	Vacant
	3	Vacant

Protected by copyright. Copyright by Volkswagen AG. Volkswagen AG does not guarantee or accept any liability with respect to the correctness of information in this document. Copyright by Volkswagen AG. Unauthorised use, in particular reproduction, is not permitted. Not to be used for private or commercial purposes.
satelettronica

Display group number	Display zone	Designation
	4	Vacant

Test sequence and test tables with measured values

Checking speed sensor allocation

Display group number 001

- Press keys 0, 0 and 1
- Confirm entry with key Q.

```
Read measured value block          1
□ 1    □      2     3     □ 4
```

-> There are always 4 display zones -arrows- in the measured value block. Decoding the individual values in display zones 1 to 4 can be read-off from the following tables.

-> Indicated on display: (vehicle stationary)

```
Read measured value block     1     "
0 km/h     0 km/h     0 km/h     0 km/h
```

Press C key for the next display group number entry.

If the ⇒key is pressed it must be continued with keys 0 and 8 for work sequence "Read measured value block".

For display group number 001 remember:

The actual wheel speeds are displayed. They serve to check the speed sensor allocation to the wheel. (The vehicle must be raised and the wheel must be rotated by hand by a 2nd mechanic).

Read measured value block			1 ⇒	Display group number: 001
0 km/h	4 km/h	0 km/h	0 km/h	◂ Indicated on display: (Example)
				Wheel speed at rear right speed sensor - (0...255 km/h)
				Wheel speed at rear left speed sensor - (0...255 km/h)
				Wheel speed at front right speed sensor - (0...255 km/h)
				Wheel speed at front left speed sensor - (0...255 km/h)

Checking speed sensor

Display group number 002

- Press keys 0, 0 and 2
- Confirm entry with key Q.

```
Read measured value block          2
□ 1    □      2     3     □ 4
```

-> There are always 4 display zones -arrows- in the measured value block. Decoding the individual values in display zones 1 to 4 can be read-off from the following tables.

-> Indicated on display: (vehicle stationary)

```
Read measured value block     2
255 km/h     255 km/h     255 km/h     255
km/h
```

Press C key for the next display group number entry.

Protected by copyright. Copying for private or commercial purposes, in part or in whole, is not permitted unless authorised by Volkswagen AG. Volkswagen AG does not guarantee or accept any liability with respect to the correctness of information in this document. Copyright by Volkswagen AG.

satelettronica

If the ⇒key is pressed it must be continued with keys 0 and 8 for work sequence "Read measured value block".

For display group number 002 remember:

The reading of measured value blocks in display group number 002 must be undertaken when driving off slowly. Then the control unit -J104- will store the first usable voltage signals provided by the speed sensors and display these as a fixed value in the measured value block.

Read measured value block 2 ⇒	Display group number: 002
3 km/h1) 6 km/h1) 2 km/h2) 1 km/h2)	◂ Indicated on display: (when driving off slowly)
	Wheel speed at rear right speed sensor - (0...255 km/h)
	Wheel speed at rear left speed sensor - (0...255 km/h)
	Wheel speed at front right speed sensor - (0...255 km/h)
	Wheel speed at front left speed sensor - (0...255 km/h)

1) If the deviations in display zones 1 and 2 are greater than 6 km/h (approx. 3.75 mph), the following faults may be present:

2) If the deviations in display zones 3 and 4 are greater than 2 km/h (approx. 1.25 mph), the following faults may be present:

- Air gap between speed sensor and rotor may be too big.

- Check that speed sensor is screwed correctly to wheel bearing housing.

- Speed sensor or rotor exterior damaged.

- Change damaged component.

Checking brake light switch for ABS and ABS/EDL function

Display group number 003

- Press keys 0, 0 and 3
- Confirm entry with key Q.

```
Read measured value block          3
□ 1    □      2      3      □ 4
```

-> There are always 4 display zones -arrows- in the measured value block. Decoding the individual values in display zones 1 to 4 can be read-off from the following tables.

-> Indicated on display:

```
Read measured value block     3     - "
     0
```

Press C key for the next display group number entry.

If the ⇒key is pressed it must be continued with keys 0 and 8 for work sequence "Read measured value block".

Read measured value block 3 ⇒	Display group number: 003
0	◂ Indicated on display
	Vacant
	Vacant
	Vacant

satelettronica

Brake light switch:
- 0 ⇒Brake pedal not depressed
- 1 ⇒Brake pedal depressed

If despite depressed foot brake a -0- or not depressed foot brake a -1- is displayed on the V.A.G 1551 display, perform test step No. 4 of Electrical check, Page 34 . There is also a possibility that the brake light switch has not been adjusted correctly.
=> Brake system; Repair group 46; Brake pedal - Assembly overview; Adjusting brake light switch
Brake pedal - Assembly overview; Adjusting brake light switch

9.12 - Initiating basic setting

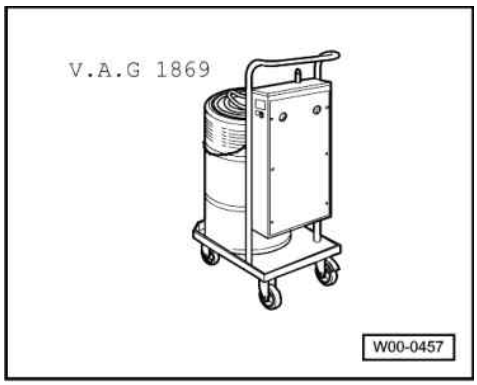

Special tools and workshop equipment required

- V.A.G 1869 Brake filling and bleeder unit

The basic setting serves as a means to bleed the hydraulic unit

- The basic setting is only necessary to bleed the hydraulic unit if at least one chamber of the brake fluid reservoir has completely run dry.
- All functions that have so far been carried out with V.A.G 1551 can now also be carried out with the tester VAS 5051.

- Connect brake filling and bleeder unit V.A.G 1869.
- Bleed brake system

=> Brake systems; Repair group 47

- Connect fault reader V.A.G 1551 and select (address word 03) "Brake electronics control unit" with ignition switched on; => Page 60

-> Indicated on display

```
Rapid data transfer      HELP
Select function XX
```

- Press keys 0 and 4. (The function "Initiating basic setting" is selected with 04).

-> Indicated on display:

```
Rapid data transfer      Q
04 - Basic Setting
```

- Confirm entry with key Q.

-> Indicated on display:

```
Basic setting     HELP
Enter display group number XXX
```

satelettronica

- Press keys 0, 0 and 1
- Confirm entry with key Q.

-> Indicated on display:

```
System in basic setting      1
Depress pedal and hold...
```

Operate pedal with substantial foot pressure and hold.

- Pedal moves down
- Hydraulic pump runs
- Pedal comes back

-> Indicated on display:

```
System in basic setting      1
Rel. pedal; FR/FL bleed screw OPEN
```

- Press key 3

-> Indicated on display:

```
System in basic setting      2
Please wait...(10 secs.)
```

Hydraulic pump runs

-> Indicated on display:

```
System in basic setting      2
Depr. pedal 10X; bleed screw CLOSED
```

- Press key 3

-> Indicated on display:

```
System in basic setting      3
Depress pedal and hold...
```

Operate pedal with substantial foot pressure and hold.

- Pedal moves down
- Hydraulic pump runs
- Pedal comes back

-> Indicated on display:

```
System in basic setting      3
Rel. pedal; FR/FL bleed screw OPEN
```

- Press key 3

-> Indicated on display:

```
System in basic setting      4
Please wait...(10 secs.)
```

Hydraulic pump runs

-> Indicated on display:

```
System in basic setting      4
Depr. pedal 10X; bleed screw CLOSED
```

- Press key 3

-> Indicated on display:

```
System in basic setting      5
Depress pedal and hold...
```

Protected by copyright. Copying for private or commercial purposes, in part or in whole, is not permitted unless authorised by Volkswagen AG. Volkswagen AG does not guarantee or accept any liability with respect to the correctness of information in this document. Copyright by Volkswagen AG.
satelettronica

Operate pedal with substantial foot pressure and hold.

- Pedal moves down
- Hydraulic pump runs
- Pedal comes back

-> Indicated on display:

```
System in basic setting     5
Rel. pedal; FR/FL bleed screw OPEN
```

- Press key 3

-> Indicated on display:

```
System in basic setting     6
Please wait...(10 secs.)
```

Hydraulic pump runs

-> Indicated on display:

```
System in basic setting     6
Depr. pedal 10X; bleed screw CLOSED
```

- Press key 3

-> Indicated on display:

```
System in basic setting     7
Depress pedal and hold...
```

Operate pedal with substantial foot pressure and hold.

- Pedal moves down
- Hydraulic pump runs
- Pedal comes back

-> Indicated on display:

```
System in basic setting     7
Rel. pedal; FR/FL bleed screw OPEN
```

- Press key 3

-> Indicated on display:

```
System in basic setting     8
Please wait...(10 secs.)
```

Hydraulic pump runs

-> Indicated on display:

```
System in basic setting     8
Depr. pedal 10X; bleed screw CLOSED
```

- Press key 3

-> Indicated on display:

```
System in basic setting     9
Depress pedal and hold...
```

Operate pedal with substantial foot pressure and hold.

- Pedal moves down
- Hydraulic pump runs
- Pedal comes back

-> Indicated on display:

Protected by copyright. Copying for private or commercial purposes, in part or in whole, is not permitted unless authorised by Volkswagen AG. Volkswagen AG does not guarantee or accept any liability with respect to the correctness of information in this document. Copyright by Volkswagen AG.
satelettronica

```
System in basic setting     9
Rel. pedal; FR/FL bleed screw OPEN
```

- Press key 3

-> Indicated on display:

```
System in basic setting     10
Please wait...(10 secs.)
```

Hydraulic pump runs

-> Indicated on display:

```
System in basic setting     10
Depr. pedal 10X; bleed screw CLOSED
```

- Press key 3

-> Indicated on display:

```
System in basic setting     11
Depress pedal and hold...
```

Operate pedal with substantial foot pressure and hold.

- Pedal moves down
- Hydraulic pump runs
- Pedal comes back

-> Indicated on display:

```
System in basic setting     11
Rel. pedal; FR/FL bleed screw OPEN
```

- Press key 3

-> Indicated on display:

```
System in basic setting     12
Please wait...(10 secs.)
```

Hydraulic pump runs

-> Indicated on display:

```
System in basic setting     12
Depr. pedal 10X; bleed screw CLOSED
```

- Press key 3

-> Indicated on display:

```
System in basic setting     13
Depress pedal and hold...
```

Operate pedal with substantial foot pressure and hold.

- Pedal moves down
- Hydraulic pump runs

-> Indicated on display:

```
System in basic setting     13
Rel. pedal; FR/FL bleed screw OPEN
```

- Press key 3

-> Indicated on display:

Protected by copyright. Copying for private or commercial purposes, in part or in whole, is not permitted unless authorised by Volkswagen AG. Volkswagen AG does not guarantee or accept any liability with respect to the correctness of information in this document. Copyright by Volkswagen AG.
satelettronica

```
System in basic setting     14
Please wait...(10 secs.)
```

Hydraulic pump runs

-> Indicated on display:

```
System in basic setting     14
Depr. pedal 10X; bleed screw CLOSED
```

- Press key 3

-> Indicated on display:

```
System in basic setting     15
Depress pedal and hold...
```

Operate pedal with substantial foot pressure and hold.

- Pedal moves down
- Hydraulic pump runs
- Pedal comes back

-> Indicated on display:

```
System in basic setting     15
Rel. pedal; FR/FL bleed screw OPEN
```

- Press key 3

-> Indicated on display:

```
System in basic setting     16
Please wait...(10 secs.)
```

Hydraulic pump runs

-> Indicated on display:

```
System in basic setting     16
Depr. pedal 10X; bleed screw CLOSED
```

- Press key 3

-> Indicated on display:

```
System in basic setting     17
Partial bleeding ended
```

- Press ⇒ key.

-> Indicated on display:

```
Rapid data transfer       HELP
Select function XX
```

- Press keys -0- and -6-, this ends the output.

-> Indicated on display

```
Rapid data transfer       Q
06 - End output
```

- Confirm entry with Q key

-> Indicated on display

```
Rapid data transfer       Help
Enter address word XX
```

Protected by copyright. Copying or publication in part or in whole is not permitted unless authorised by Volkswagen AG. Volkswagen AG does not guarantee or accept any liability with respect to the correctness of information in this document. Copyright by Volkswagen AG.

satelettronica

- Press C key
- Switch off ignition.
- Disconnect connections to fault reader V.A.G 1551.

Then the brake system must be bled again

=> Brake systems; Repair group 47

10 - Electrical check of ABS, ABS/EDL ITT Mark 20 GI and ITT Mark 20 IE

10.1 - Electrical check of ABS, ABS/EDL ITT Mark 20 GI and ITT Mark 20 IE

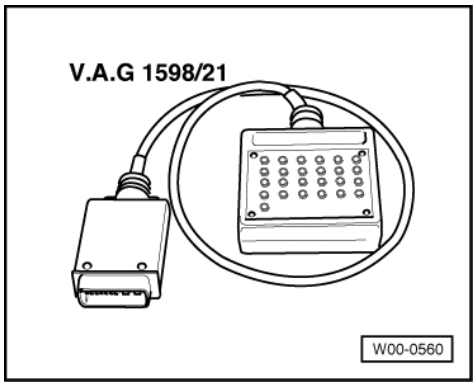

Special tools and workshop equipment required

- V.A.G 1598/21 Adapter

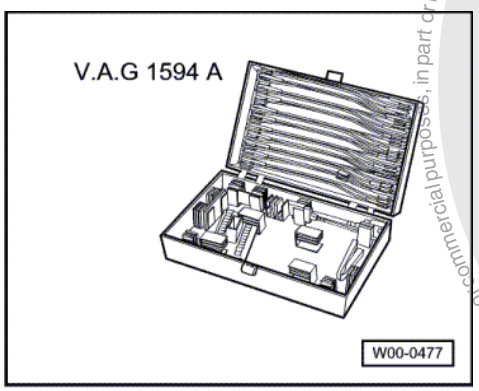

- V.A.G 1594/ A Adapter set

Protected by copyright. Copying for private or commercial purposes, in part or in whole, is not permitted unless authorised by Volkswagen AG. Volkswagen AG does not guarantee or accept any liability with respect to the correctness of information in this document. Copyright by Volkswagen AG.
satelettronica

- V.A.G 1526 A Hand multimeter

The test steps from Page 84 are valid for:

- For vehicles on which the self diagnosis does not give any indication of the source of the fault. Work through the complete electrical check.
- For vehicles on which the self diagnosis provides a direct indication of the source of the fault. Only carry out the test steps recommended in the fault table (directed entry).

An overview of all the test steps in the electrical check can be found on Page 84 .

10.2 - Test prerequisites

- Switch ignition and electrical consumers off before commencing the check (headlights, lighting, fan ...).
- Fuses S7, S20, S177 and S178 must be OK (remove fuses from fuse holder to check).

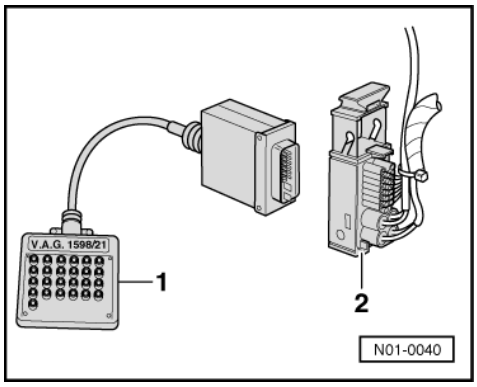

- -> Connect test box V.A.G 1598/21 -1- to multi-pin connector of control unit -J104- -2-.

The specified values are matched to the V.A.G 1526 and are not necessarily applicable for other test units.

Protected by copyright. Copying for private or commercial purposes, in part or in whole, is not permitted unless authorised by Volkswagen AG. Volkswagen AG does not guarantee or accept any liability with respect to the correctness of information in this document. Copyright by Volkswagen AG.
satelettronica

10.3 - Multi-pin connector with contact assignment

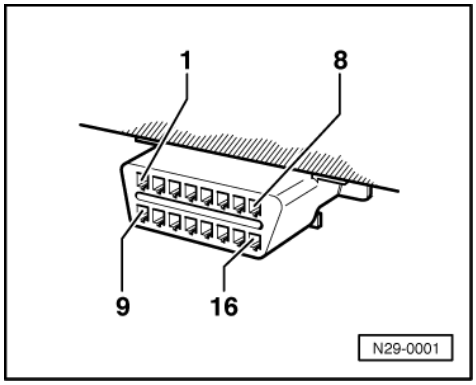

All contacts not listed are currently not assigned and must never be connected to other components!

-> Contact assignment of connectors for voltage supply and self-diagnosis with the fault reader V.A.G 1551

Contact 4	= Earth (terminal 31)
Contact 16	= Positive (terminal 30)
Contact 7	= K wire to contact 7 of multi-pin connector T25 of control unit - J104

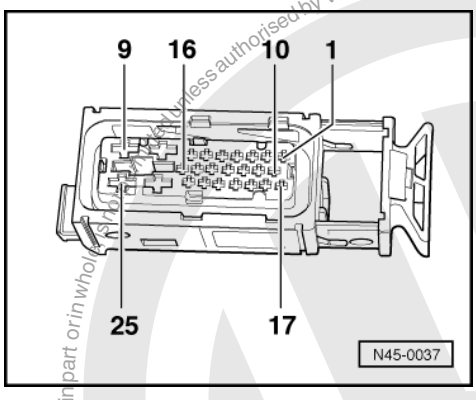

-> Contact assignment of connector T25 wiring loom/control unit - J104

Contact	Wiring connection to component ...
1	=> Front left speed sensor -G47
2	=> Front left speed sensor -G47
3	=> Vacant
4	=> Voltage supply terminal X
5	=> Rear left speed sensor -G46
6	=> Rear left speed sensor -G46
7	=> Connector T16/7, K wire
8	=> Earth connection in engine compartment wiring harness
9	=> Voltage supply from battery +
10	=> Vacant
11	=> Vacant
12	=> Vacant

Contact	Wiring connection to component ...

satelettronica

13	=> Vacant
14	=> Coding bridge to contact 21
15	=> Vacant
16	=> ABS warning lamp activation
17	=> Vacant
18	=> Brake light switch -F-
19	=> Front right speed sensor -G45
20	=> Front right speed sensor -G45
21	=> Coding bridge to contact 14
22	=> Rear right speed sensor -G44
23	=> Rear right speed sensor -G44
24	=> Earth point left in engine compartment and earth connection in engine compartment wiring harness
25	=> Voltage supply from battery +

Test step overview

Component to be tested	
Voltage supply for hydraulic pump -V64- to control unit -J104	- Perform test step 1
Voltage supply for valves in hydraulic unit -N55- to control unit -J104	- Perform test step 2
Voltage supply (terminal X) to control unit -J104	- Perform test step 3
Function of brake light switch -F	- Perform test step 4
Resistance of front right speed sensor -G45	- Perform test step 5
Resistance of front left speed sensor -G47	- Perform test step 6
Resistance of rear right speed sensor -G44	- Perform test step 7
Resistance of rear left speed sensor -G46	- Perform test step 8
Voltage signal of front right speed sensor -G45	- Perform test step 9
Voltage signal of front left speed sensor -G47	- Perform test step 10

Component to be tested	
Voltage signal of rear right speed sensor -G44	- Perform test step 11
Voltage signal of rear left speed sensor -G46	- Perform test step 12
Coding bridge	- Perform test step 13
Voltage supply for V.A.G 1551, connector T16	- Perform test step 14
Resistance of K wire for self-diagnosis, connector T16	- Perform test step 15
Function of ABS warning lamp -K47	- Perform test step 16
Function of brake system warning lamp -K118	- Perform test step 17
Function of hydraulic pump -V64	- Perform test step 18

Protected by copyright. Copyright by Volkswagen AG. Volkswagen AG. Volkswagen AG does not guarantee or accept any liability with respect to the correctness of information in this document. Copyright by Volkswagen AG.
satelettronica

10.4 - Test table

Notes on test table

- The socket designations of adapter V.A.G 1598/21 are identical to the control unit -J104- contact designations in current flow diagram.

=> Current flow diagrams, Electrical fault finding and Fitting locations binder.

- If the readings obtained deviate from the specifications, carry out fault rectification measure in the right-hand part of the table.

=> Current flow diagrams, Electrical fault finding and Fitting locations binder.

- Continuity checks with adapter set V.A.G 1594 A (bridging).
- If the measured figures only deviate slightly from the specifications, clean sockets and plugs of the testers and adapter cables (with contact spray G 000 700 04) and repeat check. Before replacing components, check wiring and connections and also, particularly for specifications of less than 10 ω, repeat resistance check on the component.

Switch to measuring range: Voltage measurement (20 V =)					
Test step	V.A.G 1598 sockets	Item tested	▪ Test conditions - Additional operations	Specification	Measures for deviations from specification
1	8 + 25	Voltage supply for hydraulic pump -V64- to control unit -J104	▪ Ignition switched off	10.0 - 14.5 V	- Check wire using current flow diagram => Current flow diagrams, Electrical fault finding and Fitting locations binder
2	9 + 24	Voltage supply for the valves in hydraulic unit -N55- to control unit -J104	▪ Ignition switched off	10.0 - 14.5 V	- Check wire using current flow diagram => Current flow diagrams, Electrical fault finding and Fitting locations binder

Switch to measuring range: Voltage measurement (20 V =)					
Test step	V.A.G 1598 sockets	Item tested	▪ Test conditions - Additional operations	Specification	Measures for deviations from specification
3	8 + 4	Voltage supply (terminal X) to control unit -J104	▪ Ignition switched on	10.0 - 14.5 V	- Check wire using current flow diagram => Current flow diagrams, Electrical fault finding and Fitting locations binder
4	8 + 18	Function of brake light switch -F	▪ Ignition switched off ▪ Brake pedal not depressed - Depress brake pedal	0.0 - 0.5 V approx. battery voltage	- Check brake light switch -F- and Read measured value block, display group 003 - Adjusting brake light switch => Brake system; Repair group 46; Brake pedal - Assembly overview; Adjusting brake light switch Brake pedal - Assembly overview; Adjusting brake light switch

Protected by copyright. Copying for private or commercial purposes, in part or in whole, is not permitted unless authorised by Volkswagen AG. Volkswagen AG does not guarantee or accept any liability with respect to the correctness of information in this document. Copyright by Volkswagen AG.

satelettronica

Switch to measuring range: Voltage measurement (20 V =)					
					- Check wiring using current flow diagram => Current flow diagrams, Electrical fault finding and Fitting locations binder

Switch to measuring range: Resistance measurement (2 kω)					
Test step	V.A.G 1598 sockets	Item tested	▪ Test conditions - Additional operations	Specification	Measures for deviations from specification
5	19 + 20	Resistance of front right speed sensor - G45	▪ Ignition switched off	1.0...1.3 kω	- Check wiring using current flow diagram => Current flow diagrams, Electrical fault finding and Fitting locations binder - Wiggle wiring during test If no fault can be located in the wiring: - Renew speed sensor -G45 => Brake systems; Repair group 45; Removing and installing parts of ABS system on front and rear axles Removing and installing parts of ABS system on front and rear axles

Switch to measuring range: Resistance measurement (2 kω)					
Test step	V.A.G 1598 sockets	Item tested	▪ Test conditions - Additional operations	Specification	Measures for deviations from specification
6	1 + 2	Resistance of front left speed sensor - G47	▪ Ignition switched off	1.0...1.3 kω	- Check wiring using current flow diagram => Current flow diagrams, Electrical fault finding and Fitting locations binder - Wiggle wiring during test If no fault can be located in the wiring: - Renew speed sensor -G47

Protected by copyright. Copying for private or commercial purposes, in part or in whole, is not permitted unless authorised by Volkswagen AG. Volkswagen AG does not guarantee or assume liability with respect to the correctness of information in this document. Copyright by Volkswagen AG.

satelettronica

Switch to measuring range: Resistance measurement (2 kω)					
					=> Brake systems; Repair group 45; Removing and installing parts of ABS system on front and rear axles Removing and installing parts of ABS system on front and rear axles

Switch to measuring range: Resistance measurement (2 kω)					
Test step	V.A.G 1598 sockets	Item tested	▪ Test conditions - Additional operations	Specification	Measures for deviations from specification
7	22 + 23	Resistance of rear right speed sensor - G44	▪ Ignition switched off	1.0...1.3 kω	- Check wiring using current flow diagram => Current flow diagrams, Electrical fault finding and Fitting locations binder - Wiggle wiring during test If no fault can be located in the wiring: - Renew speed sensor -G44 => Brake systems; Repair group 45; Removing and installing parts of ABS system on front and rear axles Removing and installing parts of ABS system on front and rear axles

Switch to measuring range: Resistance measurement (2 kω)					
Test step	V.A.G 1598 sockets	Item tested	▪ Test conditions - Additional operations	Specification	Measures for deviations from specification
8	5 + 6	Resistance of rear left speed sensor - G46	▪ Ignition switched off	1.0...1.3 kω	- Separate connector on speed sensor - G46 - Check wiring using current flow diagram => Current flow diagrams, Electrical fault finding and Fitting locations binder - Wiggle wiring during test If no fault can be located in the wiring:

Protected by copyright. Copying for private or commercial purposes, in part or in whole, is not permitted unless authorised by Volkswagen AG. Volkswagen AG does not guarantee or accept any liability with respect to the correctness of information in this document. Copyright by Volkswagen AG.
satelettronica

Switch to measuring range: Resistance measurement (2 kω)					
					- Renew speed sensor -G46 => Brake systems; Repair group 45; Removing and installing parts of ABS system on front and rear axles Removing and installing parts of ABS system on front and rear axles

Switch to measuring range: Voltage measurement (2 V font=symbol charset=fontspecific code=64 descr='[ap]')					
Test step	V.A.G 1598 sockets	Item tested	▪ Test conditions - Additional operations	Specification	Measures for deviations from specification
9	19 + 20	Front right speed sensor -G45- voltage signal	▪ Vehicle raised ▪ Ignition switched off - Rotate front right wheel at approx. 1 rev./sec.	min. 65 mV alternating voltage	- Check installation of speed sensor -G45- and rotor. - Check whether speed sensor -G45- has been interchanged andRead measured value block =>Page 73 , display group number 001
10	1 + 12	Front left speed sensor -G47- voltage signal	▪ Vehicle raised ▪ Ignition switched off - Rotate front left wheel at approx. 1 rev./sec.	min. 65 mV alternating voltage	- Check installation of speed sensor -G47- and rotor. - Check whether speed sensor -G47- has been interchanged andRead measured value block =>Page 73 , display group number 001

Protected by copyright. Copying for private or commercial purposes, in part or in whole, is not permitted unless authorised by Volkswagen AG. Volkswagen AG does not guarantee or accept any liability with respect to the correctness of information in this document. Copyright by Volkswagen AG.

Switch to measuring range: Voltage measurement (2 V font=symbol charset=fontspecific code=64 descr='[ap]')					
Test step	V.A.G 1598 sockets	Item tested	▪ Test conditions - Additional operations	Specification	Measures for deviations from specification
11	22 + 23	Rear right speed sensor -G44- voltage signal	▪ Vehicle raised ▪ Ignition switched off		- Check installation of speed sensor -G44- and rotor.

satelettronica

Switch to measuring range: Voltage measurement (2 V font=symbol charset=fontspecific code=64 descr='[ap]')					
			- Rotate rear right wheel at approx. 1 rev./sec.	min. 190 mV alternating voltage	- Check whether speed sensor -G44- has been interchanged andRead measured value block =>Page 73 , display group number 001
12	6 + 5	Rear left speed sensor -G46- voltage signal	▪ Vehicle raised ▪ Ignition switched off - Rotate rear left wheel at approx. 1 rev./sec.	min. 190 mV alternating voltage	- Check installation of speed sensor -G46- and rotor. - Check whether speed sensor -G46- has been interchanged andRead measured value block =>Page 73 , display group number 001

Switch to measuring range: Resistance measurement (200 ω)					
Test step	V.A.G 1598 sockets	Item tested	▪ Test conditions - Additional operations	Specification	Measures for deviations from specification
13	14 + 21	Coding bridge	▪ Ignition switched off	0.0 -1.0 ω	- Check wiring using current flow diagram => Current flow diagrams, Electrical fault finding and Fitting locations binder

Switch to measuring range: Voltage measurement (20 V =)					
Test step	V.A.G 1598 sockets	Item tested	▪ Test conditions - Additional operations	Specification	Measures for deviations from specification
14	-	Supply voltage for V.A.G 1551, connector T161)	▪ Ignition switched off Connect hand multimeter V.A.G 1526 using adapter set V.A.G 1594 to connector T161)	10.0 -14.5 V	- Check wiring using current flow diagram => Current flow diagrams, Electrical fault finding and Fitting locations binder

1) Diagnosis connection contact assignment =>page 83 .

Switch to measuring range: Resistance measurement 200 ω

Protected by copyright. Copying for private or commercial purposes, in part or in whole, is not permitted unless authorised by Volkswagen AG. Volkswagen AG does not guarantee or accept any liability with respect to the correctness of information in this document. Copyright by Volkswagen AG.

satelettronica

Test step	V.A.G 1598 sockets	Item tested	▪ Test conditions - Additional operations	Specification	Measures for deviations from specification
15	-	Resistance of K wire for V.A.G 1551 connector T161)	▪ Ignition switched off Disconnect multi-pin connector from control unit -J104 - Connect test box V.A.G 1598/21 - Connect multimeter V.A.G 1526 to contacts T16/71) and T25/7 of multi-pin connectors from control unit -J104- using adapter set V.A.G 1594	max. 1.5 ω	- Check wiring using current flow diagram => Current flow diagrams, Electrical fault finding and Fitting locations binder

1) Diagnosis connection contact assignment =>page 83 .

Functional check: ABS warning lamp -K47					
Test step	V.A.G 1598 sockets	Item tested	▪ Test conditions - Additional operations	Specification	Measures for deviations from specification
16	-	Function of ABS warning lamp -K47	▪ Switch ignition on	Warning lamp -K47- lights up for approx. 2 seconds and goes out again	- Check wiring using current flow diagram => Current flow diagrams, Electrical fault finding and Fitting locations binder - Fault in dash panel insert => General body repairs, interior; Repair group 70; Dash panel

Functional check: Brake system warning lamp -K118					
Test step	V.A.G 1598 sockets	Item tested	▪ Test conditions - Additional operations	Specification	Measures for deviations from specification
17	-	Function of brake system warning lamp -K118	▪ Handbrake not applied ▪ Brake fluid level is OK. ▪ Switch ignition on - Apply handbrake	Warning lamp -K118- does not light up Warning lamp -K118- lights up	- Check wiring using current flow diagram

Protected by copyright. Copying for private or commercial purposes, in part or in whole, is not permitted unless authorised by Volkswagen AG. Volkswagen AG does not guarantee or accept any liability with respect to the correctness of information in this document. Copyright by Volkswagen AG.

satelettronica

Functional check: Brake system warning lamp -K118					
					=> Current flow diagrams, Electrical fault finding and Fitting locations binder - Fault in dash panel insert => General body repairs, interior; Repair group 70; Dash panel

Functional check: Hydraulic pump -V64					
Test step	V.A.G 1598 sockets	Item tested	▪ Test conditions - Additional operations	Specification	Measures for deviations from specification
18	-	Function of ABS hydraulic pump -V64-	▪ Ignition switched off Pull connector T2f off ABS hydraulic pump -V64- at control unit -J104-		
			- Connect earth and T2f/2 battery voltage to ABS hydraulic pump connector -V64- T2f/1	Hydraulic pump -V64- runs fault free (max. 10 secs.)	- Perform final control diagnosis => Page 27 . Renew control unit -J104-.
				Hydraulic pump -V64- does not run	- Renew hydraulic unit. => Brake system; Repair group 45

11 - ITT Mark 30 IE self-diagnosis function

11.1 - ITT Mark 30 IE self-diagnosis function

From (model year 00) the following ABS system has been introduced

ITT MARK 30 IE

This ABS system is nearly identical with the ITT Mark 20 GI. The difference is the control unit software.

11.2 - Function

As the control units are interconnected with a data bus wire, always start fault finding by interrogating fault memories of all the control units in the vehicle.

This occurs in "Automatic test sequence" and is activated with key function 00.

When doing this, check to see if there are faults stored which may influence the ABS.

The self-diagnosis relates to the electrical/electronic part of the ABS, in other words only faults via the electrical connection to the control unit are recognised (e.g. speed sensor open circuit).

Protected by copyright. Copying for private or commercial purposes, in part or in whole, is not permitted unless authorised by Volkswagen AG. Volkswagen AG does not guarantee or accept any liability with respect to the correctness of information in this document. Copyright by Volkswagen AG.
satelettronica

The 25 pin ABS control unit -J104- forms with the hydraulic unit a compact unit. The unit is located on the left of the engine compartment. The control unit is equipped with a fault memory. The self-diagnosis connection is located in centre console below the ashtray insert.
The control unit recognises faults and malfunctions during vehicle operation and stores them in a permanent memory, the contents of which remain despite the lack of battery voltage.
Sporadic (irregular) faults will also be recognised. But if these faults do not occur again within the next 15 vehicle starts and driving off sequences for faults which affect the data bus system, or 50 vehicle starts and driving off sequences for other faults, they will be erased from fault memory except for the fault "Control unit defective" (forget fault counter).
After switching on the ignition and/or starting the engine the ABS warning lamp -K47- lights up for approx. 2 seconds.
During this period a test sequence (self-check) is run in the control unit for the following functions:

- To check if the supply voltage is at least 10.0 Volt,
- To check control unit including the valve windings,
- To check the coding of the control unit,
- A static check of the speed sensor (no speed signal),
- If after driving off and exceeding a speed of approx. 20 km/h (approx. 13 mph) the speed signal is not OK, the ABS warning lamp -K47- will light up again.

Fault reader V.A.G 1551 or tester VAS 5051
The self-diagnosis must be initiated at the commencement of fault finding. Electrical faults which influence the braking characteristics will be stored. They can be interrogated either with the fault reader V.A.G 1551 or with the tester VAS 5051.
The fault information displayed is used in conjunction with a fault table which has information on the possible fault causes for pin-pointed repair measures.

11.3 - Distinguishing features of ABS ITT Mark 30 IE

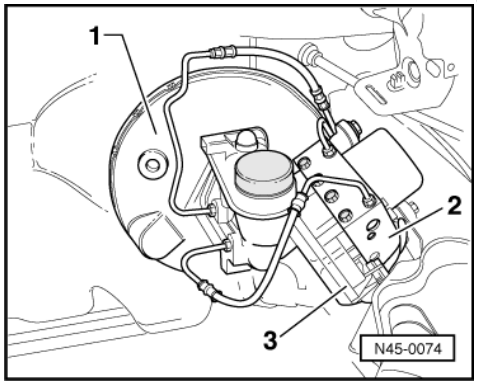

Left-hand drive
The brake servo boost is produced by vacuum pressure.
-> Distinguishing features:
1- 9" brake servo
2- Hydraulic unit
3- Control unit, 25-pin (bolted to hydraulic unit)

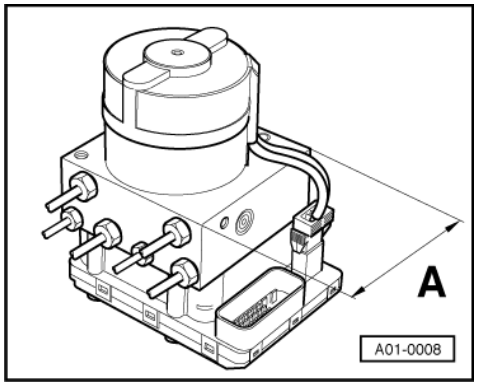

Protected by copyright. Copying for private or commercial purposes, in part or whole, is not permitted unless authorised by Volkswagen AG. Volkswagen AG does not guarantee or accept any liability with respect to the correctness of information in this document. Copyright by Volkswagen AG.
satelettronica

-> Distinguishing features of ABS ITT Mark 30 IE hydraulic unit

- Dimension -A- 100 mm vehicles with ABS

11.4 - Technical data of self-diagnosis

Control unit identification

The version of the control unit is displayed once the fault reader V.A.G 1551 or the tester VAS 5051 has been connected and the control unit for brake electronics has been selected => Page 101 .

6X0 907 379 B ABS

6X0 907 379 C ABS / EDL

Fault memory

A non-volatile memory ensures that the contents of the fault memory are retained even without a voltage supply.

Data output takes place on fault reader V.A.G 1551 in operating mode 1 (rapid data transfer), and on tester VAS 5051 in operating mode "vehicle self-diagnosis".

11.5 - Safety precautions and fundamental points regarding fault finding

- The ABS is a vehicle safety system; the appropriate knowledge is necessary to work on the system.
- In order to check complaints and to be able to carry out pin-pointed fault finding, the fault memory must be interrogated before commencing work on the ABS system.
- Only separate connectors when the ignition is switched off.
- Observe the appropriate instructions regarding the handling of brake fluid.

=> Brake systems; Repair group 47

=> Special Information, Running gear No. 21

- ABS faults are indicated by the ABS warning lamp -K47- lighting up; certain faults will only be recognised at speeds above 20 km/h (approx. 13 mph) (carry out road test).
- If the ABS -K47- and the brake system -K118- warning lamps do not light up, but the brake system is not functioning correctly then the fault must be sought in the conventional braking system.

=> Brake systems; Repair group 45

- Information on eliminating current defects

=> Technical Service Handbook.

Necessary technical information

Current flow diagrams, Electrical fault finding and Fitting locations binder
Workshop Manual Polo 1995 ‣ Brake systems
Workshop Manual Polo 1995 ‣ Running gear, axles, steering
Technical service handbook

Protected by copyright. Copyright by Volkswagen AG.
Copyright by Volkswagen AG. Volkswagen AG does not guarantee or accept any liability with respect to the correctness of information in this document.
Copying for private or commercial purposes, in part or in whole, is not permitted unless authorised by Volkswagen AG.
satelettronica

11.6 - Fault finding with fault reader V.A.G 1551 or with tester VAS 5051 on ABS, ITT Mark 30 IE (flow chart)

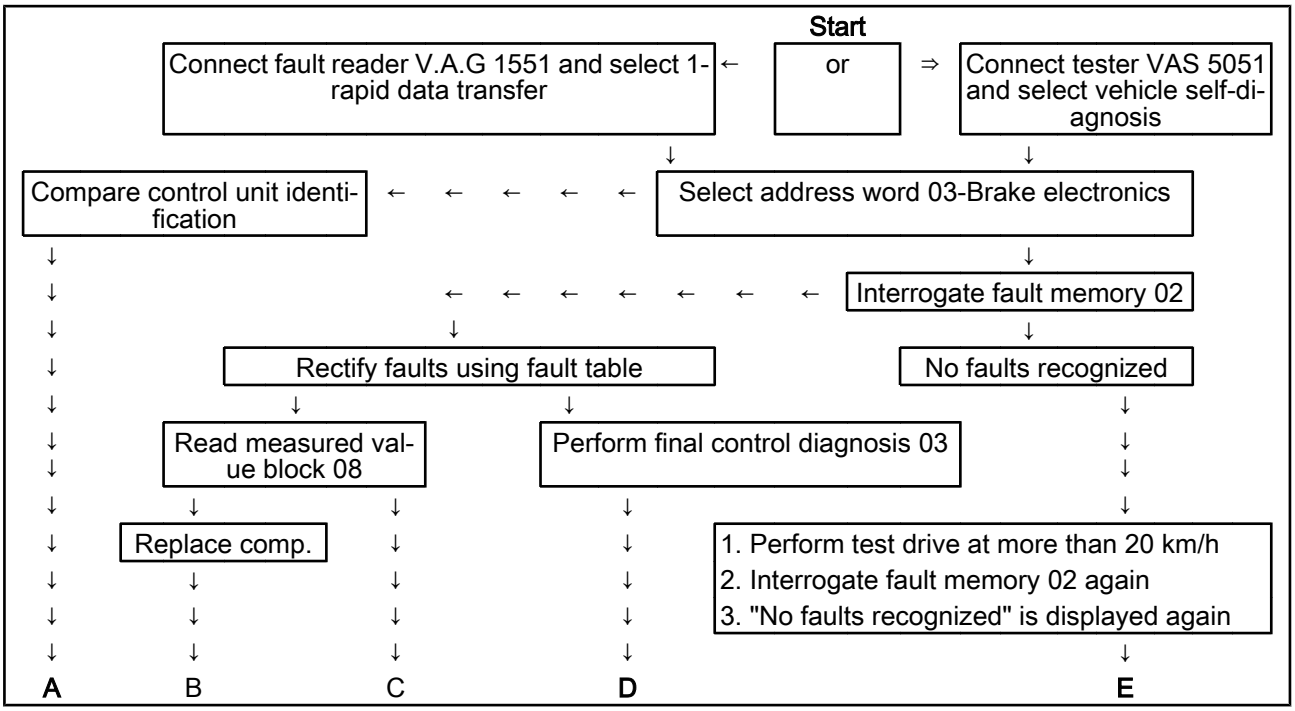

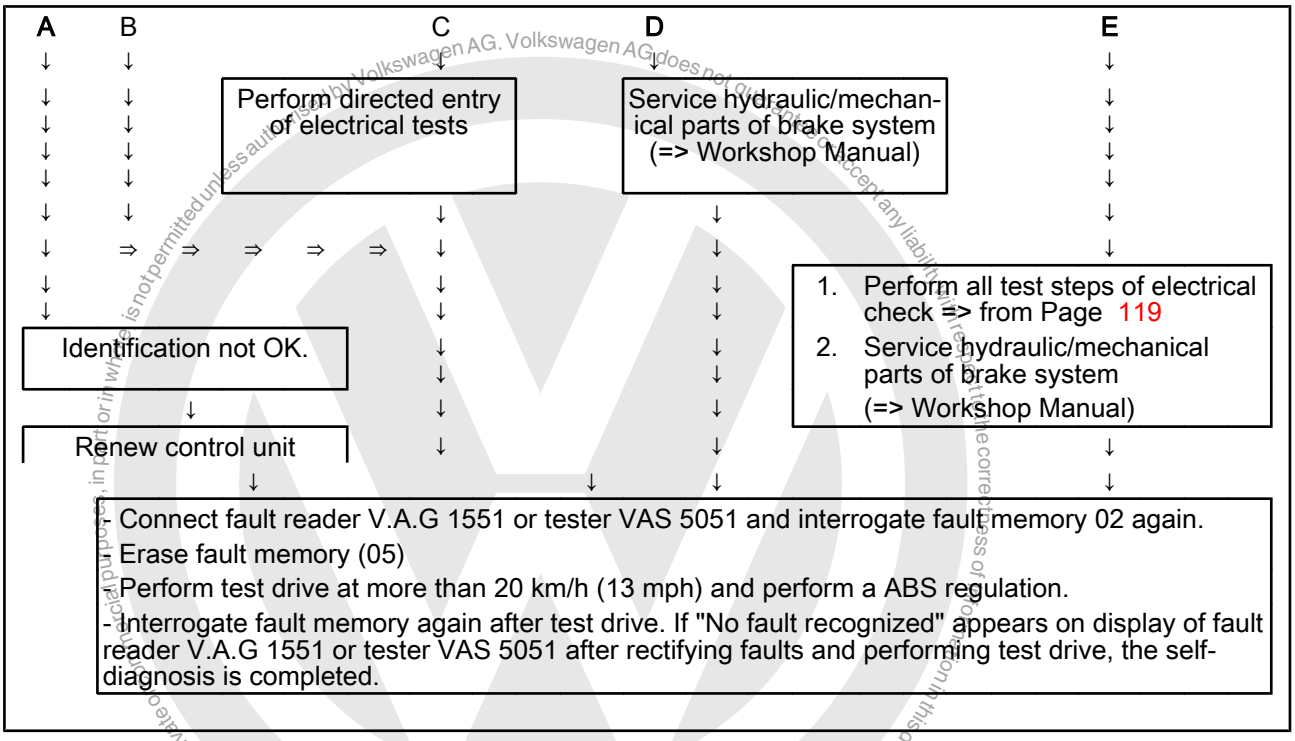

Protected by copyright. Copying for private or commercial purposes, in part or in whole, is not permitted unless authorised by Volkswagen AG. Volkswagen AG does not guarantee or accept any liability with respect to the correctness of information in this document. Copyright by Volkswagen AG.
satelettronica

12 - Electrical/electronic components and fitting locations

12.1 - Electrical/electronic components and fitting locations

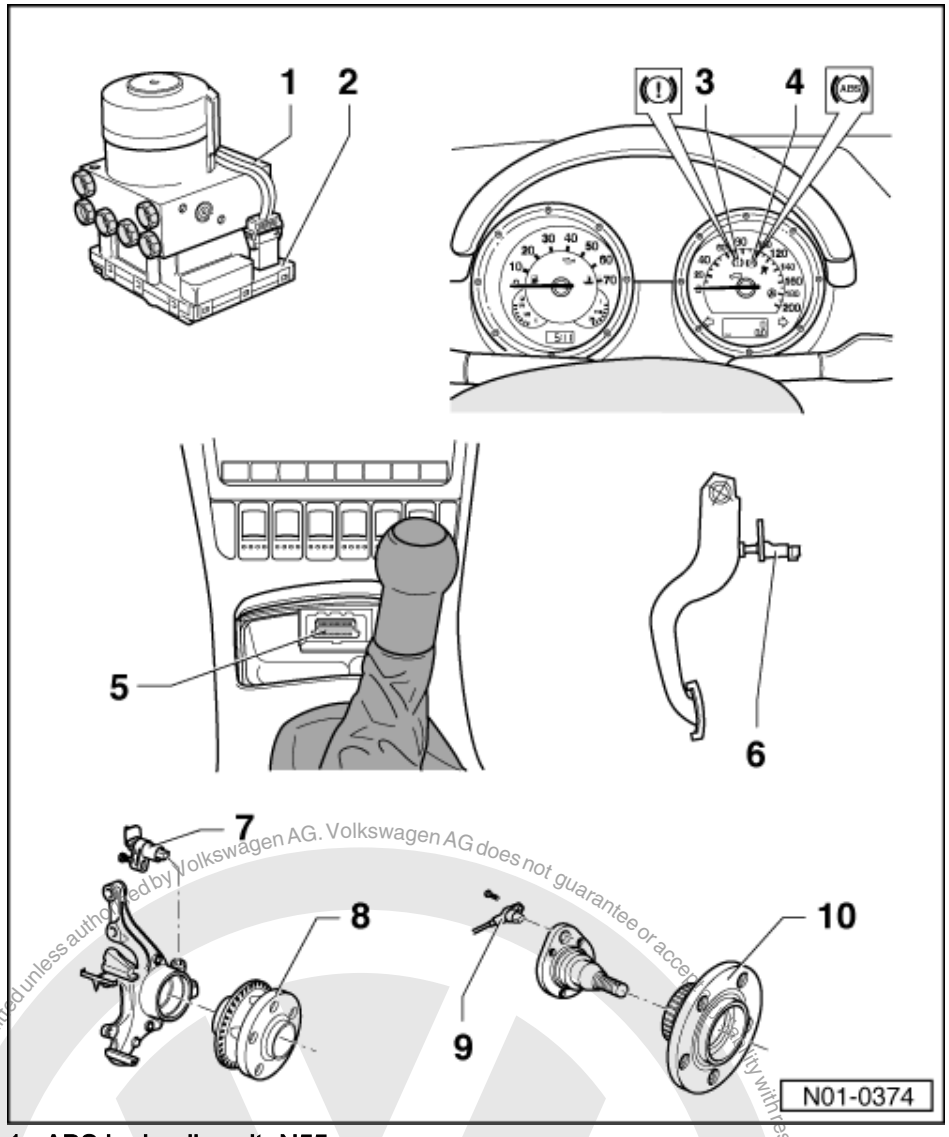

1 ABS hydraulic unit -N55

- Located on left of engine compartment.
- The hydraulic pump -V64- and the inlet/outlet valves in the hydraulic unit are checked by self-diagnosis
- The hydraulic pump -V64- and valve block must not be separated from one another
- Removing and installing

=> Brake systems; Repair group 45

- When changing the hydraulic unit, always seal the old part with the plugs from the repair set Part No. 1H0 698 311 A

Protected by copyright. Copying for private or commercial purposes, in part or in whole, is not permitted unless authorised by Volkswagen AG. Volkswagen AG does not guarantee or accept any liability with respect to the correctness of information in this document. Copyright by Volkswagen AG.
satelettronica

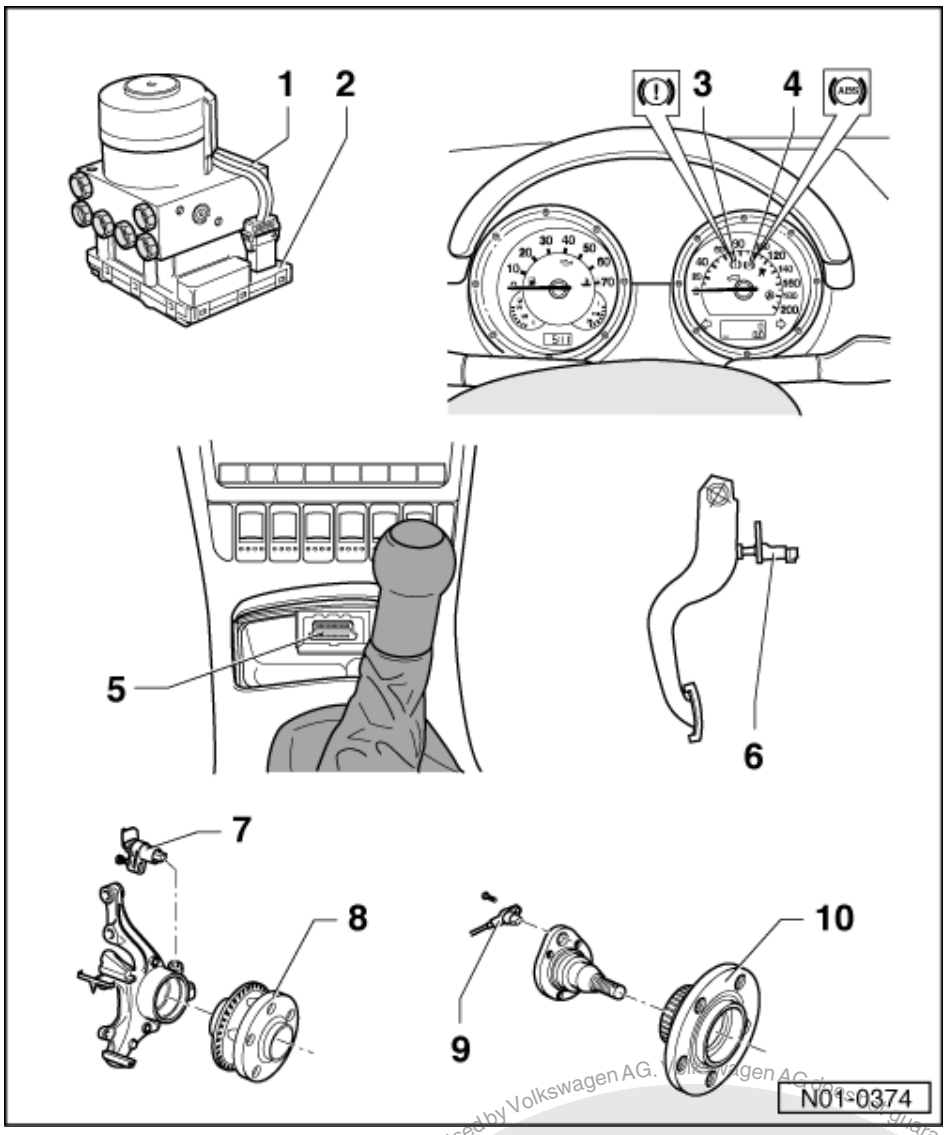

2 ABS control unit -J104
- Location: on hydraulic unit on left of engine compartment
- Checked by self-diagnosis
- Checking the multi-pin connector to control unit =>Page 121
- Do not disconnect connector before successfully completing self-diagnosis. Switch ignition off before separating connection.

3 Brake system warning lamp -K118
- Location: In the dash panel insert
  Function: =>Page 100

4 ABS warning lamp -K47
- Location: In the dash panel insert
  Function: =>Page 100

satelettronica

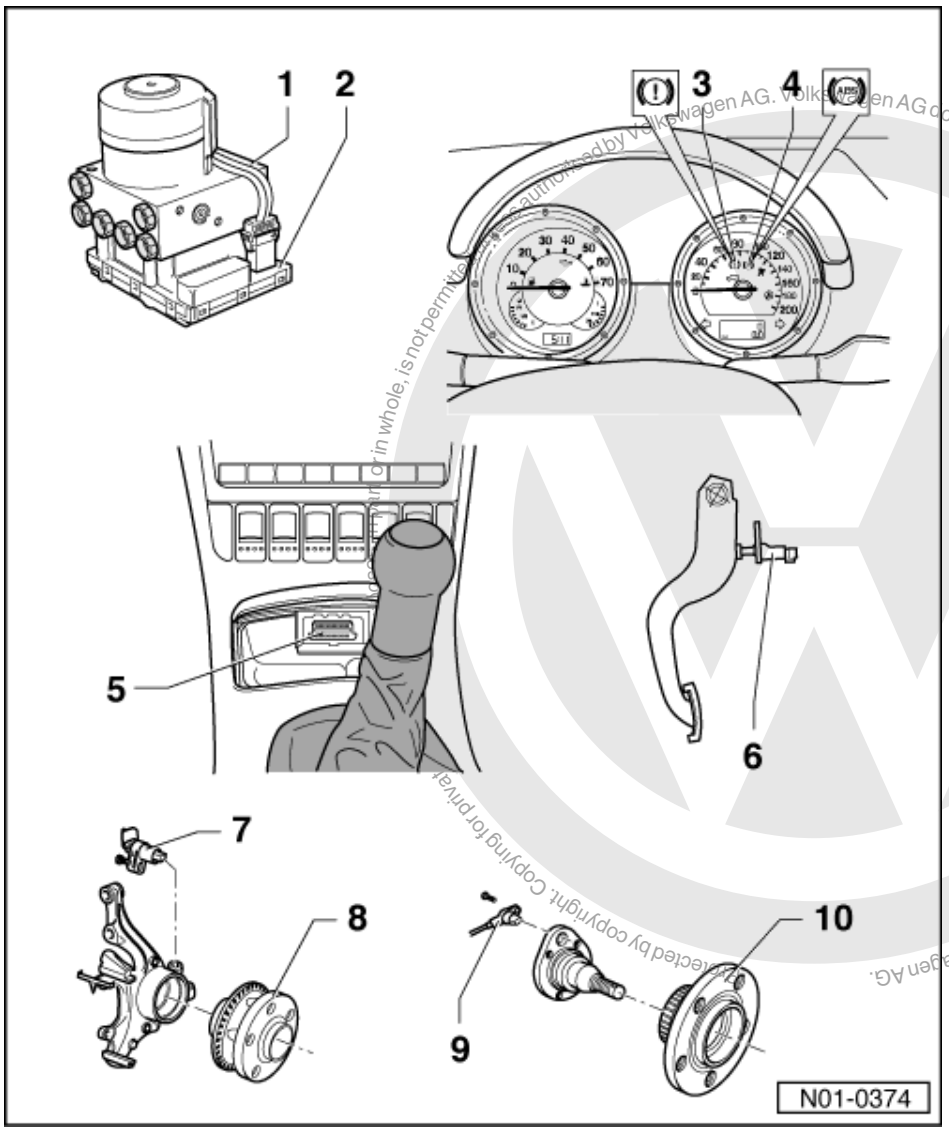

5 Diagnostic connections
- Fitting location: in centre console below ashtray

6 Brake light switch -F
- The brake light switch is open in the rest position;
- Can be checked in measured value block => Page 115
- Adjusting

=> Brake system; Repair group 46; Brake pedal - Assembly overview; Adjusting brake light switch Brake pedal - Assembly overview Adjusting brake light switch

satelettronica

Protected by copyright. Copying for private or commercial purposes, in part or in whole, is not permitted unless authorised by Volkswagen AG. Volkswagen AG does not guarantee or accept any liability with respect to the correctness of information in this document. Copyright by Volkswagen AG.

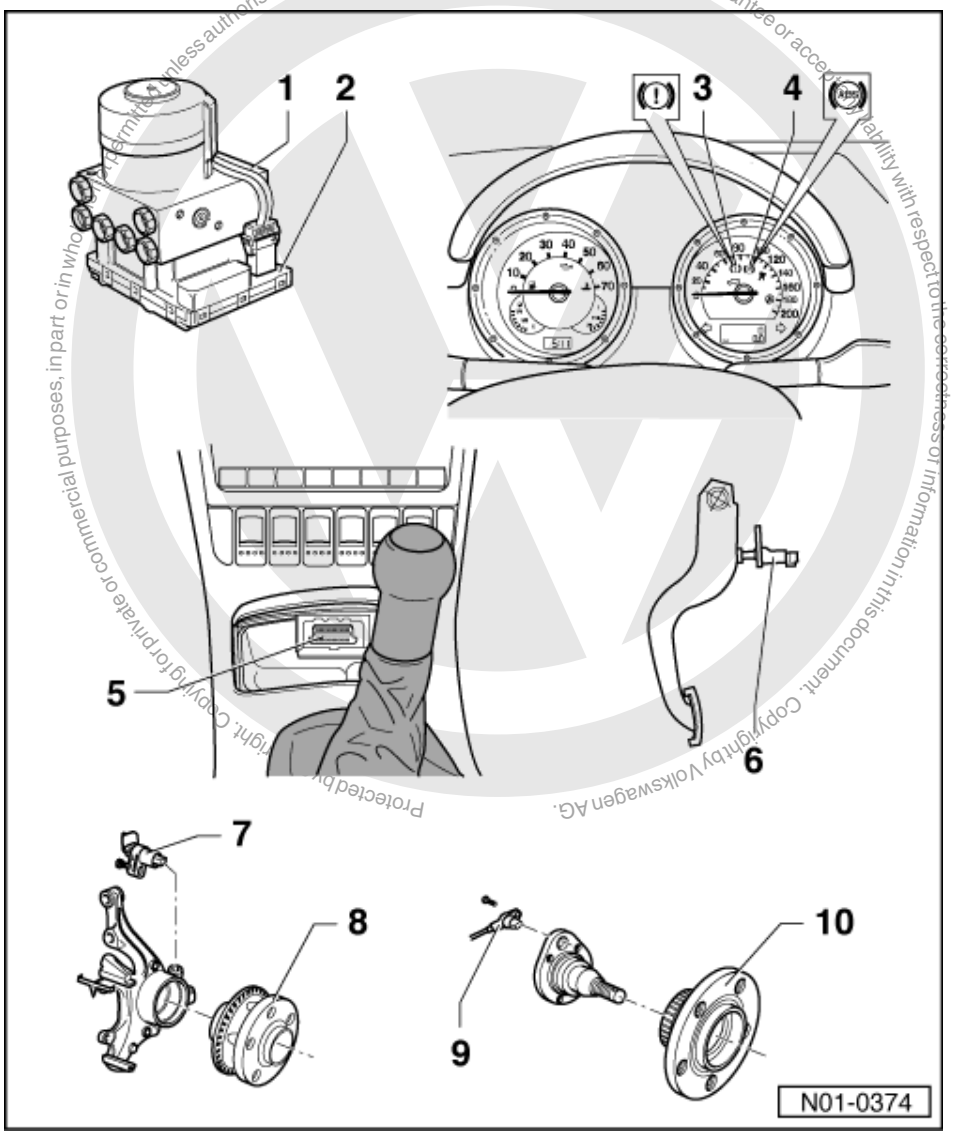

7 Front right/left speed sensor -G45-/-G47

- Checked by self-diagnosis
- Before inserting the sensor clean the inner surface of the sensor mounting and coat with lubricating paste G 000 650
- When connecting the speed sensor wire ensure it is not twisted in the wheel housing
- Bolt tightening torque 10 Nm

8 Wheel hub with rotor for speed sensors

- Wheel hub, wheel bearing with sensor ring and speed sensors for front left and right are the same as each other
- Removing and installing

=> Running gear, Axles, Steering; Repair group 40; Servicing front suspension Servicing front suspension

satelettronica

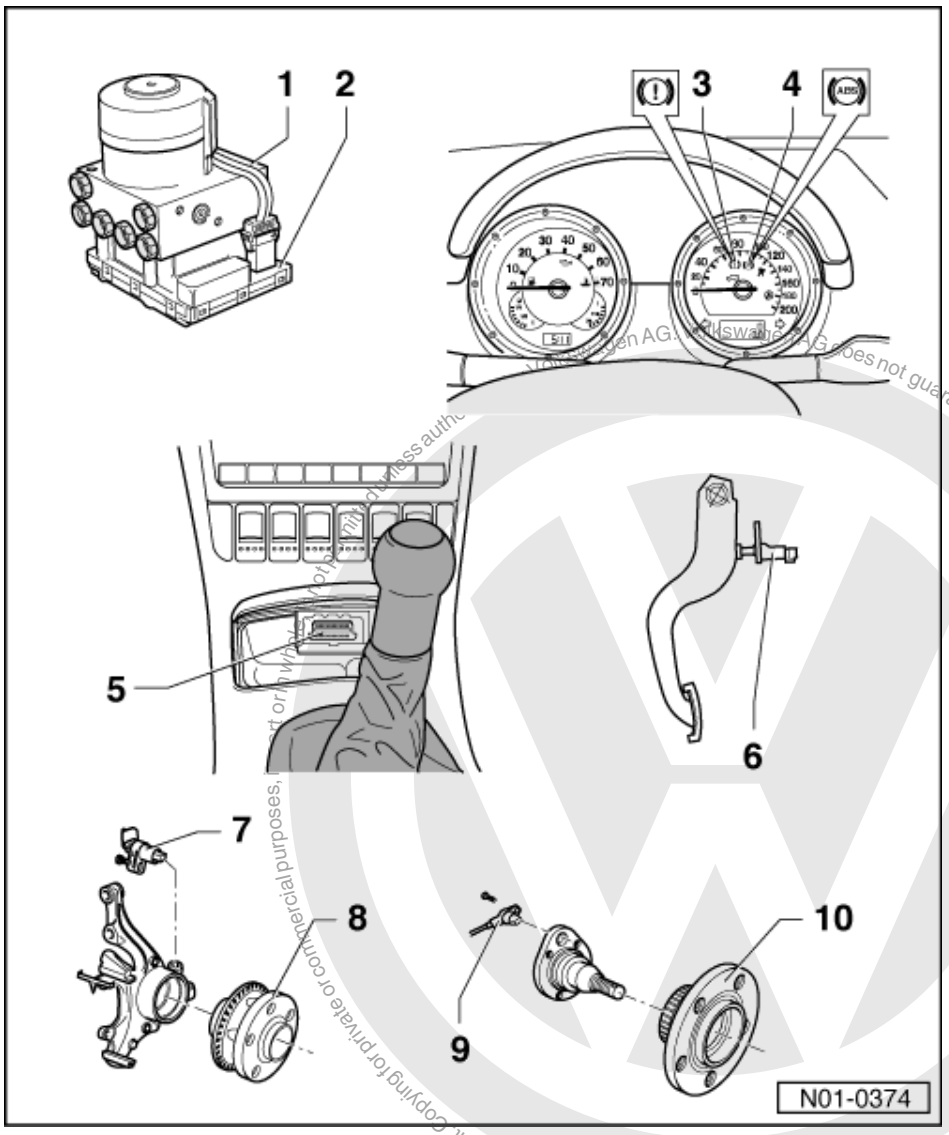

9 Rear right/left speed sensor -G44-/-G46

- Checked by self-diagnosis
- Before inserting the sensor clean the inner surface of the sensor mounting and coat with lubricating paste G 000 650
- When connecting the speed sensor wire ensure it is not twisted in the wheel housing
- Bolt tightening torque 10 Nm

10 Wheel hub with rotor for speed sensors

- Wheel hub, wheel bearing with sensor ring and speed sensors for rear left and right are the same as each other
- Removing and installing

=> Running gear, axles, steering; Repair group Gr. 42; Servicing wheel bearings

satelettronica

13 - Faults displayed by warning lamps K47 and K118

13.1 - Faults displayed by warning lamps K47 and K118

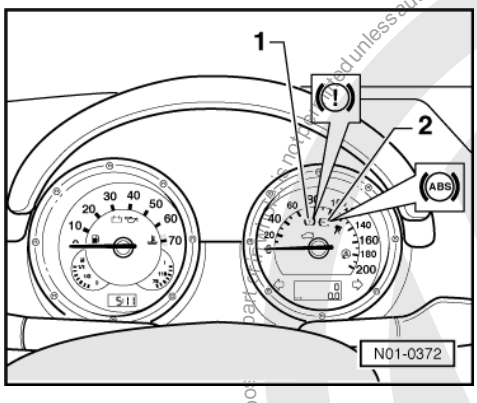

-> Warning lamps

Item	Designation
1	Brake system warning lamp -K118
2	ABS warning lamp -K47

Warning lamp -K47

- If the ABS warning lamp -K47- -2- does not go out after switching on ignition and completion of test sequence, then the fault may be:

  -a- Voltage supply is below 10 Volt
  -b- There is a fault in the ABS
  The anti-locking brake system remains switched off with an ABS fault -b-, but the brake system remains fully operational.
  -c- Since the last time the vehicle was started there was a temporary speed sensor fault.
  In the case of a sensor fault -c-, the ABS warning lamp -K47- will extinguish after restarting the engine and attaining a speed of above 20 km/h (approx. 13 mph).
  -d- The connection from dash panel insert to control unit -J104- is interrupted.

=> Current flow diagrams, Electrical fault finding and Fitting locations binder

  -e- Dash panel insert is defective.

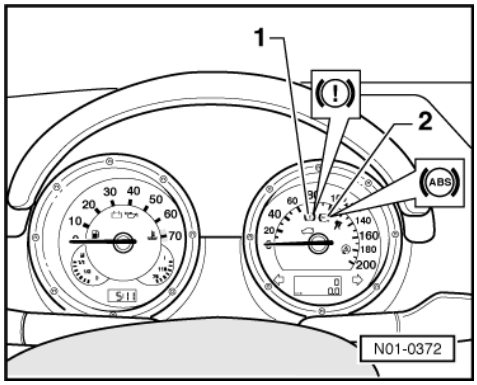

Warning lamps -K47- and -K118

- -> If the ABS warning lamp -K47- -2- goes out, but the brake system warning lamp -K118- remains on, then the fault may be:

Protected by copyright. Copying for private or commercial purposes, in part or in whole, is not permitted unless authorised by Volkswagen AG. Volkswagen AG does not guarantee or accept any liability with respect to the correctness of information in this document. Copyright by Volkswagen AG.
satelettronica

-a- The handbrake is applied..
-b- There is a fault in the activation of the brake system warning lamp -K118.

=> Current flow diagrams, Electrical fault finding and Fitting locations binder
-c- The brake fluid level is too low.

- If the ABS warning lamp -K47- -2- and the brake system warning lamp -K118- -1- light up, the ABS system is defective and the EBD (Electronic brake pressure distribution) is not functioning.

Warning! After the ABS warning lamp -K47- and brake system warning lamp -K118- have lit up, it is possible that the rear wheels will lock-up earlier.

14 - Performing self diagnosis

14.1 - Performing self diagnosis

14.2 - Test prerequisites for self-diagnosis

- The tyres fitted to all wheels must be of the same (approved) size; tyres inflated to prescribed pressure.
- Mechanical/hydraulic parts of the brake system including brake light switch and brake lights OK.
- Hydraulic pipes and connections not leaking (visual check of hydraulic unit, brake calipers, wheel cylinders, tandem master brake cylinder).
- Wheel bearings and wheel bearing play OK.
- Control unit -J104- is correctly bolted to hydraulic unit -N55.
- Connector on control unit -J104- correctly plugged-in (retainer is engaged).
- Check contacts of ABS components for damage and correct seating.
- All fuses according to current flow diagram OK (remove fuse from fuse holder to check).
- Supply voltage OK (at least 10.0 V).

14.3 - Safety precautions

Observe following if test and measuring instruments are required during a test drive:
- Test and measuring instruments must be secured to rear seat and operated by a 2nd person from this location.
- When test and measuring instruments are operated from the front passenger seat there is a danger that the person sitting there could be injured in an accident when the airbag is triggered.

14.4 - Connecting fault reader V.A.G 1551 and selecting function

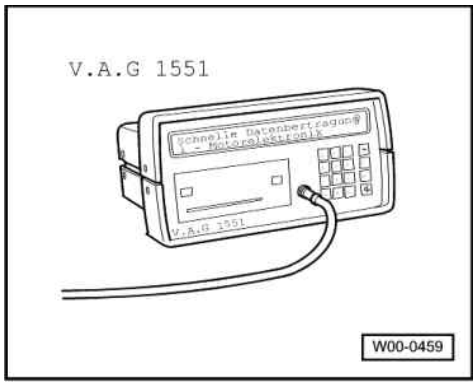

Volkswagen AG. Volkswagen AG does not guarantee or accept any liability with respect to the correctness of information in this document. Copyright by Volkswagen AG. Copying for private or commercial purposes, in part or in whole, is not permitted unless authorised by Volkswagen AG.
satelettronica

Reproduced by copyright authorised by Volkswagen AG. Volkswagen AG does not guarantee or accept any liability with respect to the correctness of information in this document. Copyright by Volkswagen AG.

All functions which could previously be performed with V.A.G 1551 can also be performed with the new tester VAS 5051 in the operating mode "vehicle self-diagnosis":

Special tools and workshop equipment required

- V.A.G 1551 Fault reader or V.A.G 1552 vehicle system tester.

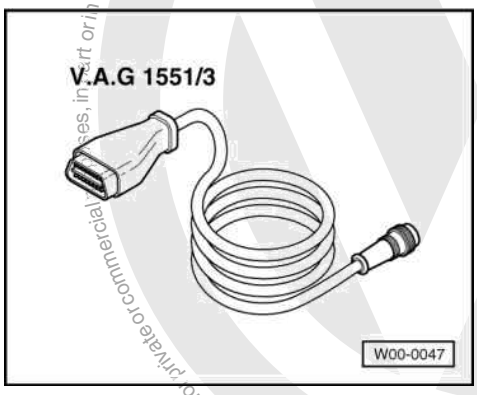

- V.A.G 1551/3 or 1551/3A Adapter cable
- The ABS function is switched off in the control unit during the self diagnosis.

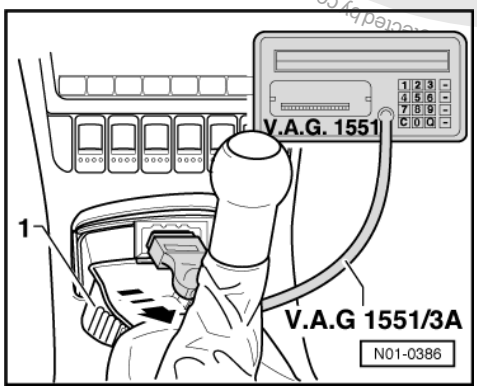

- The fault memory can be erased after successful interrogation and repair.

- -> Pull cover -1- off in direction of arrow.
- With ignition switched off connect V.A.G 1551 using cable V.A.G 1551/3(A) to diagnostic socket.
- Connecting VAS 5051 => Page 14 .

-> Indicated on display:

```
V.A.G - SELF-DIAGNOSIS      HELP
1 - Rapid data transfer1)
2 - Flash code output1)
```

1) Is displayed alternately

If nothing is indicated on the display, check self-diagnosis connector, electrical test, =>Page 119 , test steps 14 and 15.

- Depending on the programme, additional operating information can be printed out by pressing the HELP key of V.A.G 1551.
- The ⇒key is used for moving forward within the programme
- The PRINT key is used for switching on the printer (warning lamp in key comes on).

- Switch on ignition.
- Switch on printer with the Print key (indicator lamp in key lights up).
- Press key -1- for "Rapid data transfer" operating mode.

-> Indicated on display:

satelettronica

```
Rapid data transfer      HELP
Enter address word XX
```

- Press keys -0- and -3-; 03 inputs the address word of the vehicle system to be tested "Brake electronics".

-> Indicated on display:

```
Rapid data transfer      Q
03 - Brake electronics
```

- Confirm input with Q key.

-> and subsequently indicated on display is e.g.:

```
6X0 907 379 B     ABS     30     IE
CAN     V004
Coding 05603     WSC XXXXX
```

Displayed is:

- The control unit identification number.

e.g. (6X0 907 379 B).

Allocation of control unit

=> Parts list

- System designation (ABS 30 IE)
- Data bus option (CAN).

=> Current flow diagrams, Electrical fault finding and Fitting locations binder

- Control unit coding (05603).

Coding control unit =>Page 113

- Workshop code

=> Fault reader V.A.G 1551 operating instructions

If the control unit identification number does not appear
=> Summary of selectable functions Page 105 .

- Press ⇒ key.

-> Indicated on display (select function, e.g. 02 - Interrogate fault memory).

```
Rapid data transfer     HELP
Select function XX
```

-> Indicated on display:

```
Rapid data transfer     HELP
Control unit does not answer!
```

- By pressing the HELP key, a list of possible fault causes is printed out.
- After rectifying the possible causes of the fault, again enter the address word 03 for "Brake electronics" and confirm with Q key.

If "Control unit does not answer!" again appears:

-> Indicated on display:

```
Rapid data transfer     HELP
Control unit does not answer!
```

Protected by copyright. Copying for private or commercial purposes, in part or in whole, is not permitted unless authorised by Volkswagen AG. Volkswagen AG does not guarantee or accept any liability with respect to the correctness of information in this document. Copyright by Volkswagen AG.
satelettronica

- Electrical check, => Page 119 , perform test steps 1, 2 and 3.

-> Faults have occurred during interrogation of control unit identification (possibly influenced from external sources?)

```
Rapid data transfer
No signal from control unit!
```

- Check diagnostic wire as well as voltage supply and earth connection for ABS control unit (J104), Electrical check, =>Page 119 .
- After rectifying the possible causes of the fault, again enter the address word 03 for "Brake electronics" and confirm with Q key.

14.5 - Connecting Vehicle Diagnosis, Testing and Information System VAS 5051 and selecting engine electronics control unit

All functions which could previously be performed with V.A.G 1551 can also be performed with the new tester VAS 5051 in the operating mode "vehicle self-diagnosis":

=> Operating instructions for Vehicle Diagnosis, Testing and Information System VAS 5051.

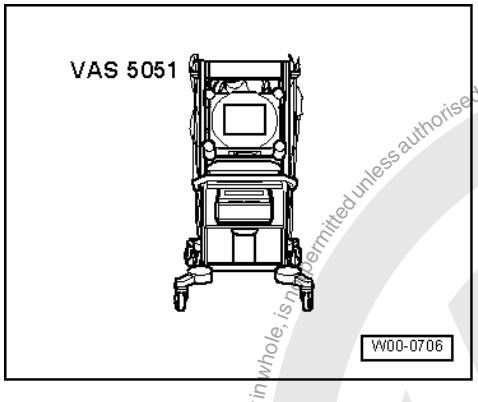

Special tools, workshop equipment, testers, measuring instruments and auxiliary items required

- VAS 5051 Vehicle Diagnosis, Testing and Information System
- The ABS function is switched off in the control unit during the self diagnosis.

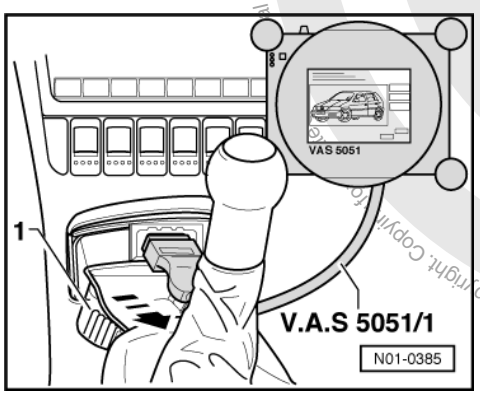

- The fault memory can be erased after successful interrogation and repair.

- -> Pull cover -1- off in direction of arrow.

Protected by copyright. Copyright by Volkswagen AG. Volkswagen AG does not guarantee or accept any liability with respect to the correctness of information in this document. Copyright by Volkswagen AG. All purposes in part or in whole, is not permitted unless authorised by Volkswagen AG.
satelettronica

- With ignition switched off, connect tester VAS 5051 to diagnosis connection using diagnosis cable VAS 5051/1 or VAS 5051/3.

◆ In the functions 04 - Basic setting/08 - Read data block, the display zones will be listed from top to bottom.
◆ If the display does not indicate as described in the work sequence:

=> Operating instructions for Vehicle Diagnosis, Testing and Information System VAS 5051.

14.6 - List of selectable functions

	Page
00 - Automatic test sequence	16
01 - Interrogate control unit version =>Connecting fault reader V.A.G 1551 and selecting functions	101
01 - Interrogate control unit version => Connecting tester VAS 5051 and selecting functions	104
02 - Interrogate fault memory	105
03 - Final control diagnosis	27
04 - Initiate basic setting1)	76
05 - Erase fault memory	112
06 - End output	112
07 - Code control unit	113
08 - Read measured value block	115

1) The basic setting is only necessary if at least one chamber of the brake fluid reservoir has completely run dry.

14.7 - Interrogating fault memory

◆ All functions that have so far been carried out with V.A.G 1551 can now also be carried out with the tester VAS 5051.

-> Indicated on display:

```
Rapid data transfer      HELP
Select function XX
```

- Press keys -0- and -2-; 02 enters the "Interrogate fault memory" function.

-> Indicated on display:

```
Rapid data transfer      Q
02 - Interrogate fault memory
```

- Confirm entry with Q key.

-> The number of stored faults or "No fault recognised" appears in the display.

```
X Faults recognised!
```

- Press ⇒ key.
- Press ⇒key.

The stored faults are displayed and printed out one after the other.

- With fault information print-out eliminate fault according to fault table, Page 106 .

Protected by copyright. Copyright by Volkswagen AG. Volkswagen AG does not guarantee or accept any liability with respect to the correctness of information in this document. Copyright by Volkswagen AG. Reproduction, in whole or in part, is not permitted unless authorised by Volkswagen AG.
satelettronica

As with "No fault recognised", the programme returns to the start position after pressing the ⇒key:

-> Indicated on display:

```
Rapid data transfer     HELP
Select function XX
```

- End output (Function 06) => Page 112 .
- Switch off ignition and unplug diagnostic connectors.

Work sequence if a fault has been detected:

1. Rectify fault according to fault table, Page 106

2. Interrogate fault memory (Function 02)

3. Erase fault memory (Function 05)

4. End output (Function 06)

5. Perform a test drive

6. Interrogate fault memory again

14.8 - Fault table

Notes on fault table

- When commencing fault finding of the vehicle control units, always start with function "Automatic test sequence" by pressing keys 0 and 0 because the control units are interconnected with a data bus wire. This interrogates the fault memories of the control units in the vehicle.
- All the possible faults which can be recognised by the ABS control unit -J104- and printed-out on V.A.G 1551 or VAS 5051, are listed on the following pages according to the 5 digit fault code.
- Fault code appears (in the "Rapid data transfer" mode) only on the print-out.

Example:	
Fault code	Fault type code
5 digit	3 digit
00283	035

- The 3 digit fault type code is a data code and may be disregarded, but the fault type text is of use.
- Before replacing components indicated as being faulty, check all the appropriate connectors, wiring and earth connections using the current flow diagram =>Current flow diagrams, Electrical fault finding and Fitting locations binder.
- On completion of repairs always interrogate the fault memory with fault reader V.A.G 1551 or the new tester VAS 5051 and erase.
- Carry out road test exceeding 20 km/h (13 mph).
- After the road test interrogate fault memory again.

V.A.G 1551 print-out	Possible cause of fault	Rectifying fault
No fault recognised	If "No fault recognised" appears after carrying out repairs, self diagnosis is ended.	
	If, despite "No fault recognised" appearing in the display, the ABS system does not function properly, then proceed as follows:	
	1. Carry out road test exceeding 20 km/h (13 mph),	
	2. Again interrogate fault memory, if there is still no fault stored,	

sateletronica

V.A.G 1551 print-out	Possible cause of fault	Rectifying fault
	3. Continue fault finding without self-diagnosis and work through the complete Electrical check => Page 119 .	

V.A.G 1551 print-out	Possible cause of fault	Rectifying fault
00283 Front left speed sensor -G47	- Open circuit, short to positive or earth, or loose contact in connections between speed sensor -G47- and control unit -J104	- Check wiring and connections using current flow diagram Perform electrical checks =>from Page 119
	- Damaged rotor or speed sensor -G47 - Speed sensor windings -G47- defective	- Check speed sensor -G47- and rotor for damage Renew rotor/speed sensor -G47 => Brake systems; Repair group 45; Removing and installing parts of ABS system on front and rear axles Removing and installing parts of ABS system on front and rear axles If the fault occurs again:
	- ABS control unit -J104- defective	- Renew control unit -J104 => Brake systems; Repair group 45

V.A.G 1551 print-out	Possible cause of fault	Rectifying fault
00283 Front left speed sensor -G47 Signal outside tolerances1)	- Open circuit, short to positive or earth, or loose contact in connections between speed sensor -G47 and control unit -J104	- Check wiring and connections using current flow diagram Perform electrical checks =>from Page 119
	- Electrical interference from other sources (high frequency radiation e.g. non-insulated ignition cable)	- Read measured value block =>Page 115 Display group number 001
	- Damaged rotor or speed sensor -G47	
	- Excessive air gap between speed sensor -G47- and rotor (signal not OK.)	- Check speed sensor -G47- and rotor for damage Renew rotor/speed sensor => Brake systems; Repair group 45; Removing and installing parts of ABS system on front and rear axles Removing and installing parts of ABS system on front and rear axles

1) Type of fault, this fault is only recognised above 20 km/h (13 mph) (carry out test drive).

V.A.G 1551 print-out	Possible cause of fault	Rectifying fault
00283 Front left speed sensor -G47 Mechanical fault1)	- Excessive air gap between speed sensor -G47- and rotor (signal not OK.)	- Check installation of speed sensor -G47- and rotor => Brake systems; Repair group 45; Removing and installing parts of ABS system on front and rear axles 27 If the fault occurs again:
	- Outlet valve in hydraulic unit -N55- defective	- Renew hydraulic unit -N55

Protected by copyright. Copying for private or commercial purposes, in part or in whole, is not permitted unless authorised by Volkswagen AG. Volkswagen AG does not guarantee or accept any liability with respect to the correctness of information in this document. Copyright by Volkswagen AG.
satelettronica

V.A.G 1551 print-out	Possible cause of fault	Rectifying fault
		=> Brake systems; Repair group 45

1) Type of fault, this fault is only recognised above 20 km/h (13 mph) (carry out test drive).

V.A.G 1551 print-out	Possible cause of fault	Rectifying fault
00285 Front right speed sensor -G45	- Open circuit, short to positive or earth, or loose contact in connections between speed sensor -G45- and control unit -J104 - Damaged rotor or speed sensor -G45 - Speed sensor windings -G45- defective - ABS control unit -J104- defective	- Check wiring and connections using current flow diagram Perform electrical checks =>from Page 119 - Check speed sensor -G45- and rotor for damage Renew rotor/speed sensor -G45 => Brake systems; Repair group 45; Removing and installing parts of ABS system on front and rear axles Removing and installing parts of ABS system on front and rear axles If the fault occurs again: - Renew control unit -J104 => Brake systems; Repair group 45

V.A.G 1551 print-out	Possible cause of fault	Rectifying fault
00285 Front right speed sensor -G45 Signal outside tolerances1)	- Open circuit, short to positive or earth, or loose contact in connections between speed sensor -G45- and control unit -J104 - Electrical interference from other sources (high frequency radiation e.g. non-insulated ignition cable) - Damaged rotor or speed sensor -G45 - Excessive air gap between speed sensor -G45- and rotor (signal not OK.)	- Check wiring and connections using current flow diagram Perform electrical checks =>from Page 119 - Read measured value block =>Page 115 Display group number 001 - Check speed sensor -G45- and rotor for damage Renew rotor/speed sensor => Brake systems; Repair group 45; Removing and installing parts of ABS system on front and rear axles Removing and installing parts of ABS system on front and rear axles

1) Type of fault, this fault is only recognised above 20 km/h (13 mph) (carry out test drive).

V.A.G 1551 print-out	Possible cause of fault	Rectifying fault
00285 Front right speed sensor -G45 Mechanical fault1)	- Excessive air gap between speed sensor -G45- and rotor (signal not OK.) - Outlet valve in hydraulic unit -N55- defective	- Check installation of speed sensor -G45- and rotor => Brake systems; Repair group 45; Removing and installing parts of ABS system on front and rear axles 27 If the fault occurs again: - Renew hydraulic unit -N55

Protected by copyright. Copying for private or commercial purposes, in part or in whole, is not permitted unless authorised by Volkswagen AG. VW does not guarantee the correctness of information in this document. Copyright by Volkswagen AG.

satelettronica

V.A.G 1551 print-out	Possible cause of fault	Rectifying fault
		=> Brake systems; Repair group 45

1) Type of fault, this fault is only recognised above 20 km/h (13 mph) (carry out test drive).

V.A.G 1551 print-out	Possible cause of fault	Rectifying fault
00287 Rear right speed sensor -G44	- Open circuit, short to positive or earth, or loose contact in connections between speed sensor -G44- and control unit -J104	- Check wiring and connections using current flow diagram Perform electrical checks =>from Page 119
	- Damaged rotor or speed sensor -G44 - Speed sensor windings -G44- defective	- Check speed sensor -G44- and rotor for damage Renew rotor/speed sensor -G44 => Brake systems; Repair group 45; Removing and installing parts of ABS system on front and rear axles Removing and installing parts of ABS system on front and rear axles
	- ABS control unit -J104- defective	If the fault occurs again: - Renew control unit -J104 => Brake systems; Repair group 45

V.A.G 1551 print-out	Possible cause of fault	Rectifying fault
00287 Rear right speed sensor -G44 Signal outside tolerances1)	- Open circuit, short to positive or earth, or loose contact in connections between speed sensor -G44- and control unit -J104	- Check wiring and connections using current flow diagram Perform electrical checks =>from page 119
	- Electrical interference from other sources (high frequency radiation e.g. non-insulated ignition cable)	- Read measured value block =>Page 115 Display group number 001
	- Damaged rotor or speed sensor -G44 - Excessive air gap between speed sensor -G44- and rotor (signal not OK.)	- Check speed sensor -G44- and rotor for damage Renew rotor/speed sensor => Brake systems; Repair group 45; Removing and installing parts of ABS system on front and rear axles Removing and installing parts of ABS system on front and rear axles

1) Type of fault, this fault is only recognised above 20 km/h (13 mph) (carry out test drive).

V.A.G 1551 print-out	Possible cause of fault	Rectifying fault
00287 Rear right speed sensor -G44 Mechanical fault1)	- Excessive air gap between speed sensor -G44- and rotor (signal not OK.)	- Check installation of speed sensor -G44- and rotor => Brake systems; Repair group 45; Removing and installing parts of ABS system on front and rear axles 27
	- Outlet valve in hydraulic unit -N55- defective	If the fault occurs again: - Renew hydraulic unit -N55

satelettronica

V.A.G 1551 print-out	Possible cause of fault	Rectifying fault
		=> Brake systems; Repair group 45

1) Type of fault, this fault is only recognised above 20 km/h (13 mph) (carry out test drive).

V.A.G 1551 print-out	Possible cause of fault	Rectifying fault
00290 Rear left speed sensor -G46	- Open circuit, short to positive or earth, or loose contact in connections between speed sensor -G46- and control unit -J104 - Speed sensor windings -G46- defective - Damaged rotor or speed sensor -G46 - ABS control unit -J104- defective	- Check wiring and connections using current flow diagram Perform electrical checks =>from Page 119 - Check speed sensor -G46- and rotor for damage Renew rotor/speed sensor -G46 => Brake systems; Repair group 45; Removing and installing parts of ABS system on front and rear axles Removing and installing parts of ABS system on front and rear axles If the fault occurs again: - Renew control unit -J104 => Brake systems; Repair group 45

V.A.G 1551 print-out	Possible cause of fault	Rectifying fault
00290 Rear left speed sensor -G46 Signal outside tolerances1)	- Open circuit, short to positive or earth, or loose contact in connections between speed sensor -G46- and control unit -J104 - Electrical interference from other sources (high frequency radiation e.g. non-insulated ignition cable) - Damaged rotor or speed sensor -G46 - Excessive air gap between speed sensor -G46- and rotor (signal not OK.)	- Check wiring and connections using current flow diagram Perform electrical checks =>from Page 119 - Read measured value block =>Page 115 Display group number 001 - Check speed sensor -G46- and rotor for damage Renew rotor/speed sensor => Brake systems; Repair group 45; Removing and installing parts of ABS system on front and rear axles Removing and installing parts of ABS system on front and rear axles

1) Type of fault, this fault is only recognised above 20 km/h (13 mph) (carry out test drive).

V.A.G 1551 print-out	Possible cause of fault	Rectifying fault
00290 Rear left speed sensor -G46 Mechanical fault1)	- Excessive air gap between speed sensor -G46- and rotor (signal not OK.) - Outlet valve in hydraulic unit -N55- defective	- Check installation of speed sensor -G46- and rotor => Brake systems; Repair group 45; Removing and installing parts of ABS system on front and rear axles 27 If the fault occurs again: - Renew hydraulic unit -N55

Protected by copyright. Copying for private or commercial purposes, in any form, is not permitted unless authorised by Volkswagen AG. Volkswagen AG does not guarantee or accept any liability with respect to the correctness of information in this document. Copyright by Volkswagen AG.
satelettronica

V.A.G 1551 print-out	Possible cause of fault	Rectifying fault
		=> Brake systems; Repair group 45

1) Type of fault, this fault is only recognised above 20 km/h (13 mph) (carry out test drive).

V.A.G 1551 print-out	Possible cause of fault	Rectifying fault
00668 Vehicle voltage terminal 30 Signal outside tolerances	- Open circuit, short to positive or earth in the wiring	- Check wiring and connections using current flow diagram - Perform electrical check =>from Page 119
01044 Control unit incorrectly coded	- Control unit -J104- incorrectly coded - Coding bridge in multi-pin connector to control unit -J104- open or short circuit	- Check coding for control unit -J104- =>Page 113 - Check wiring and connections using current flow diagram - Perform electrical check =>from Page 119

V.A.G 1551 print-out	Possible cause of fault	Rectifying fault
01130 ABS operation Implausible signal1)	- Electrical interference from other sources (high frequency radiation e.g. non-insulated ignition cable) - Open circuit, short to positive or earth in the wiring - ABS control unit -J104- defective	- Erase fault memory Perform test drive at more than 20 km/h (13 mph) Interrogate fault memory again - Check wiring and connections using current flow diagram - Perform electrical check =>from Page 119 If the fault occurs again: - Renew control unit -J104 => Brake systems; Repair group 45

1) Type of fault, this fault is only recognised above 20 km/h (13 mph) (carry out test drive).

V.A.G 1551 print-out	Possible cause of fault	Rectifying fault
01276 ABS hydraulic pump -V64 Signal outside tolerances1)	- Hydraulic pump connector -V64- to ABS control unit -J104 - Open circuit, short to positive or earth in the wiring - Hydraulic pump -V64- defective - ABS control unit -J104- defective	- Perform final control diagnosis => Page 27 - Check wiring and connections using current flow diagram - Perform electrical check =>from Page 119 - If hydraulic pump -V64- runs fault-free when test step No. 17 of the electrical check is performed => Page 119 , the control unit -J104- must be renewed. - Renew control unit -J104 => Brake systems; Repair group 45

1) Type of fault, this fault is only recognised above 20 km/h (13 mph) (carry out test drive).

satelettronica

V.A.G 1551 print-out	Possible cause of fault	Rectifying fault
01312 Drive train data bus defective1) or:	- ABS control unit -J104- incorrectly coded - Engine control unit incorrectly coded	- Check control unit coding -J104- =>Page 113 Check engine control unit coding => Repair group 01 of corresponding engine code
	- Open circuit, short to positive or earth in data bus wiring	- Check wiring and connections of data bus wiring using current flow diagram - Perform electrical check =>from Page 119

1) The fault message "drive train data bus defective" does not lead to the switching on of the ABS warning lamp -K47-. The ABS remains fully functional.

V.A.G 1551 print-out	Possible cause of fault	Rectifying fault
01314 Engine control unit No communication		- Read measured value block =>Page 115 Display group number 125
	- Open circuit, short to positive or earth in data bus wiring	- Check wiring and connections of data bus wiring using current flow diagram
or:		- Perform electrical check =>from Page 119
Interrogate engine control unit memory	- Fault entry in engine control unit	- Interrogate engine control unit fault memory => Repair group 01 for relevant engine codes

V.A.G 1551 print-out	Possible cause of fault	Rectifying fault
01315 Gearbox control unit1) No communication		- Read measured value block =>Page 115 Display group number 125
	- Open circuit, short to positive or earth in data bus wiring	- Check wiring and connections of data bus wiring using current flow diagram - Perform electrical check =>from Page 119
65535 Control unit defective	ABS control unit -J104- defective	- Renew control unit -J104 => Brake systems; Repair group 45

1) Vehicles with automatic gearbox only.

14.9 - Erasing fault memory, ending output

- All functions that have so far been carried out with V.A.G 1551 can now also be carried out with the tester VAS 5051.

Prerequisites:

- Fault memory interrogated => Page 105 .

Copyright by Volkswagen AG. Volkswagen AG does not guarantee or accept any liability with respect to the correctness of information in this document. Copyright by Volkswagen AG. Protected by copyright. Copying for private, commercial purposes, in part or in whole is not permitted unless authorised by Volkswagen AG.
satelettronica

1. Erasing fault memory

- Press ⇒ key.

-> Indicated on display:

```
Rapid data transfer       HELP
Select function XX
```

- Press keys 0 and 5; 05 enters the "Erase fault memory" function.

-> Indicated on display:

```
Rapid data transfer       Q
05 Erase fault memory
```

- Confirm entry with Q key

-> Indicated on display:

```
Rapid data transfer
Fault memory is erased!
```

- Press ⇒ key.

-> Indicated on display:

```
Rapid data transfer       HELP
Select function XX
```

-> Indicated on display:

```
Warning!
Fault memory was not interrogated.
```

- Adhere exactly to test sequence: First interrogate fault memory, then erase

2. Ending output

- Press keys 0 and 6, this ends the output.

-> Indicated on display

```
Rapid data transfer       Q
06 - End output
```

- Confirm input with Q key.

-> Indicated on display:

```
Rapid data transfer       HELP
Select function XX
```

- Switch off ignition.
- Disconnect connection to fault reader V.A.G 1551
- Switch on ignition.

ABS warning lamp -K47- must go out after approx. 2 seconds.

14.10 - Coding control unit

- All functions that have so far been carried out with V.A.G 1551 can now also be carried out with the tester VAS 5051.
- Warning lamps for ABS -K47- and for brake system -K118- flash when control unit is coded with 00000. An entry is not set in the fault memory.

Protected by copyright. Copying for private or commercial purposes, either in whole, is not permitted unless authorised by Volkswagen AG. Volkswagen AG does not guarantee or accept any liability with respect to the correctness of information in this document. Copyright by Volkswagen AG.
satelettronica

- The control unit -J104- must be recoded if the vehicle relevant coding is not displayed or the control unit has been renewed.

Coding is only possible after the workshop code (WSC) has been entered into V.A.G 1551.

Work sequence

- Connect fault reader V.A.G 1551 and select (address word 03) "Brake electronics control unit" with ignition switched on; => Page 101 .

-> Indicated on display:

```
Rapid data transfer      HELP
Select function XX
```

- Input 07 for the function "Code control unit" and confirm with Q.

-> Indicated on display:

```
Rapid data transfer      Q
07 - Code control unit
```

- Confirm input with Q key.

-> Indicated on display:

```
Coding control unit      Q
Enter code number XXXXX      (0-32000)
```

- Enter the relevant code number for this vehicle and confirm with Q key.

  Coding variations => Page 114 .

-> On the display the control unit identification and coding are displayed, e.g.:

```
6X0 907 379 B     ABS     30     IE
CAN     V004
Coding 05603     WSC XXXXX
```

ABS system ITT Mark 30IE

Coding table for ABS

With control unit identification number 6X0 907 379 B 1)

Engine	Engine code	Veh. version	Code number
All	All	Front wheel drive	05603

1) With diagnostic interface for data bus.

=> Current flow diagrams, Electrical fault finding and Fitting locations binder.

Protected by copyright. Copyright by Volkswagen AG. Volkswagen AG does not guarantee or accept any liability with respect to the correctness of information in this document. Copyright by Volkswagen AG.
satelettronica

Coding table for ABS

With control unit identification number 6X0 907 379 B 1)

Engine	Engine code	Veh. version	Code number
All	All	Front wheel drive	05703

2) Without diagnostic interface for data bus.

=> Current flow diagrams, Electrical fault finding and Fitting locations binder.

ABS/EDL system ITT Mark 30IE

Coding table for ABS/EDL

for engines up to 66 kW

With control unit identification number 6X0 907 379 C

Engine	Engine code	Veh. version	Code number
All	All	Front wheel drive	05603

Coding table for ABS/EDL

For engines from 66 kW

With control unit identification number 6X0 907 379 C

Engine	Engine code	Veh. version	Code number
All	All	Front wheel drive	15603

14.11 - Read measured value block

- All functions that have so far been carried out with V.A.G 1551 can now also be carried out with the tester VAS 5051.

The control unit can transfer a considerable amount of test data. This test data delivers information on the operational condition of the system and/or sensors connected to it. In many cases the transferred test data supports fault finding and fault rectification. The test data has been summarized into single display groups because all the information cannot be evaluated at the same time. The information can be selected via display group numbers.

Safety measures

Note!
-
-
-

- Connect fault reader V.A.G 1551 and select (address word 03) "Brake electronics control unit" with ignition switched on; => Page 101 .

-> Indicated on display:

Protected by copyright. Copying for private or commercial purposes, in part or in whole, is not permitted unless authorised by Volkswagen AG. Volkswagen AG does not guarantee or accept any liability with respect to the correctness of information in this document. Copyright by Volkswagen AG.

satelettronica

```
Rapid data transfer       HELP
Select function XX
```

- Press keys 0 and 8. (The function "Read measured value block" is initiated with 08.)

-> Indicated on display:

```
Rapid data transfer       Q
08 - Read measured value block
```

- Confirm entry with key Q.

-> Indicated on display:

```
Read measured value block
Enter display group number XXX
```

- Enter display group number => List of selectable display group numbers, Page 116 .

List of selectable display group numbers

Display group number	Display zone	Designation
001	1	Wheel speed at front left wheel sensor (km/h)
	2	Wheel speed at front right wheel sensor (km/h)
	3	Wheel speed at rear left speed sensor (km/h)
	4	Wheel speed at rear right speed sensor (km/h)
002	1	Wheel speed at front left speed sensor (km/h)
	2	Wheel speed at front right wheel sensor (km/h)
	3	Wheel speed at rear left speed sensor (km/h)
	4	Wheel speed at rear right speed sensor (km/h)

Display group number	Display zone	Designation
003	1	Brake light switch
	2	Vacant
	3	Vacant
	4	Vacant
125	1	Data bus for engine
	2	Data bus for gearbox
	3	Vacant
	4	Vacant

Test sequence and test tables with measured values

Checking speed sensor allocation

Display group number 001

- Press keys 0, 0 and 1.
- Confirm entry with key Q.

```
Read measured value block          1
□ 1    □     2     3     □ 4
```

-> There are always 4 display zones -arrows- in the measured value block. Decoding the individual values in display zones 1 to 4 can be read-off from the following tables.

-> Indicated on display: (vehicle stationary)

Protected by copyright. Copyright Volkswagen AG. Volkswagen AG does not guarantee or accept any liability with respect to the correctness of information in this document. Copying for private or commercial purposes, in part or in whole, is not permitted unless authorised by Volkswagen AG.
satelettronica

```
Read measured value block      1      "
0 km/h      0 km/h      0 km/h      0 km/h
```

Press C key for the next display group number entry.

If the ⇒key is pressed, keys 0 and 8 for work sequence "Read measured value block" must be pressed again afterwards to regain entry.

For display group number 001 remember:

The actual wheel speeds are displayed. They serve to check the speed sensor allocation to the wheel. (The vehicle must be raised and the wheel must be rotated by hand by a 2nd mechanic).

Read measured value block			1 ⇒	Display group number: 001
0 km/h	4 km/h	0 km/h	0 km/h	◂ Indicated on display: (Example)
				Wheel speed at rear right speed sensor - (0...255 km/h)
				Wheel speed at rear left speed sensor - (0...255 km/h)
				Wheel speed at front right speed sensor - (0...255 km/h)
				Wheel speed at front left speed sensor - (0...255 km/h)

Checking speed sensor

Display group number 002

- Press keys 0, 0 and 2.
- Confirm entry with key Q.

```
Read measured value block          2
□ 1     □      2      3      □ 4
```

-> There are always 4 display zones -arrows- in the measured value block. Decoding the individual values in display zones 1 to 4 can be read-off from the following tables.

-> Indicated on display: (vehicle stationary)

```
Read measured value block      2
255 km/h     255 km/h     255 km/h     255
km/h
```

Press C key for the next display group number entry.

If the ⇒key is pressed, keys 0 and 8 for work sequence "Read measured value block" must be pressed again afterwards to regain entry.

For display group number 002 remember:

The reading of measured value blocks in display group number 002 must be undertaken when driving off slowly. Then the control unit -J104- will store the first usable voltage signals provided by the speed sensors and display these as a fixed value in the measured value block.

Read measured value block			2 ⇒	Display group number: 002
3 km/h1)	6 km/h1)	2 km/h2)	1 km/h2)	◂ Indicated on display: (when driving off slowly)
				Wheel speed at rear right speed sensor - (0...255 km/h)
				Wheel speed at rear left speed sensor - (0...255 km/h)
				Wheel speed at front right speed sensor - (0...255 km/h)

Protected by copyright. Copyright by Volkswagen AG. Volkswagen AG does not guarantee or accept any liability with respect to the correctness of information in this document. Copyright by Volkswagen AG. Commercial use, sales, or private use, in part or in whole, is not permitted unless authorized by Volkswagen AG.
satelettronica

Wheel speed at front left speed sensor - (0...255 km/h)

1) If the deviations in display zones 1 and 2 are greater than 6 km/h (approx. 3.75 mph), the following faults may be present:

2) If the deviations in display zones 3 and 4 are greater than 2 km/h (approx. 1.25 mph), the following faults may be present:

- Air gap between speed sensor and rotor may be too big.

- Check that speed sensor is screwed correctly to wheel bearing housing.

- Speed sensor or rotor exterior damaged.

- Change damaged component.

Checking brake light switch

Display group number 003

- Press keys 0, 0 and 3
- Confirm entry with key Q.

```
Read measured value block          3
□ 1    □      2      3      □ 4
```

-> There are always 4 display zones -arrows- in the measured value block. Decoding the individual values in display zones 1 to 4 can be read-off from the following tables.

-> Indicated on display: (vehicle stationary)

```
Read measured value block     3
not oper.
```

Press C key for the next display group number entry.

If the ⇒key is pressed, keys 0 and 8 for work sequence "Read measured value block" must be pressed again afterwards to regain entry.

Read measured value block 3 ⇒ not oper.	**Display group number: 003** ◂ Indicated on display
Vacant **Vacant** **Vacant** Brake light switch: - not oper. ⇒Brake pedal not depressed - oper. ⇒Brake pedal depressed If despite depressed foot brake -not oper.- or despite not depressed foot brake -oper.- is displayed on the V.A.G 1551 display, perform test step No. 4 of Electrical check, Page 119 . There is also a possibility that the brake light switch has not been correctly adjusted. => Brake system; Repair group 46; Brake pedal - Assembly overview; Adjusting brake light switch Brake pedal - Assembly overview; Adjusting brake light switch	

Checking data bus wiring

Display group number 125

- Press keys 1, 2 and 5
- Confirm entry with key Q.

```
Read measured value block          125
□ 1    □      2      3      □ 4
```

Protected by copyright. Copyright by Volkswagen AG.
Copyright by Volkswagen AG. Volkswagen AG does not guarantee or accept any liability with respect to the correctness of information in this document. Copying for private or commercial purposes, in part or in whole, is not permitted unless authorised by Volkswagen AG.
satelettronica

-> There are always 4 display zones -arrows- in the measured value block. Decoding the individual values in display zones 1 to 4 can be read-off from the following tables.

-> Indicated on display: (vehicle stationary)

```
Read measured value block      125
Engine 1      Gear. 1
```

Press C key for the next display group number entry.
If the ⇒key is pressed, keys 0 and 8 for work sequence "Read measured value block" must be pressed again afterwards to regain entry.

Read measured value block 125 ⇒	Display group number: 125
Engine 1 Gear. 1	◂ Indicated on display (example)
Vacant Vacant Data bus for gearbox1) - 1 ⇒Data bus connected. - 0 ⇒Data bus not connected.2) Data bus for engine - 1 ⇒Data bus connected - 0 ⇒Data bus not connected.2)	

1) Vehicles with automatic gearbox only.
2) Data bus connection interrupted (open circuit) or data bus wiring interchanged.
=> Current flow diagrams, Electrical fault finding and Fitting locations binder.

15 - Electrical check of ABS ITT Mark 30 IE

15.1 - Electrical check of ABS ITT Mark 30 IE

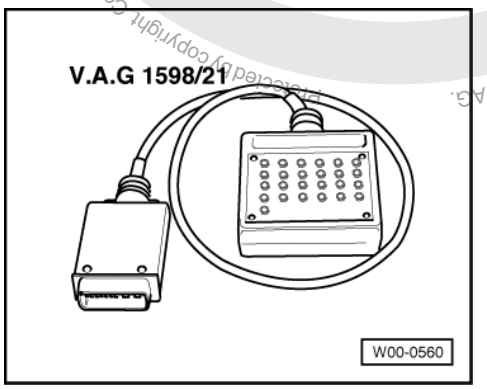

Special tools and workshop equipment required

- V.A.G 1598/21 Adapter

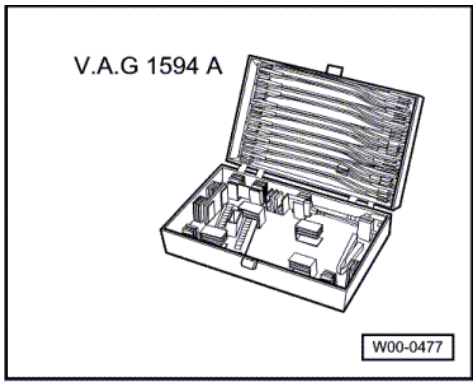

satelettronica

- V.A.G 1594 A Auxiliary test set

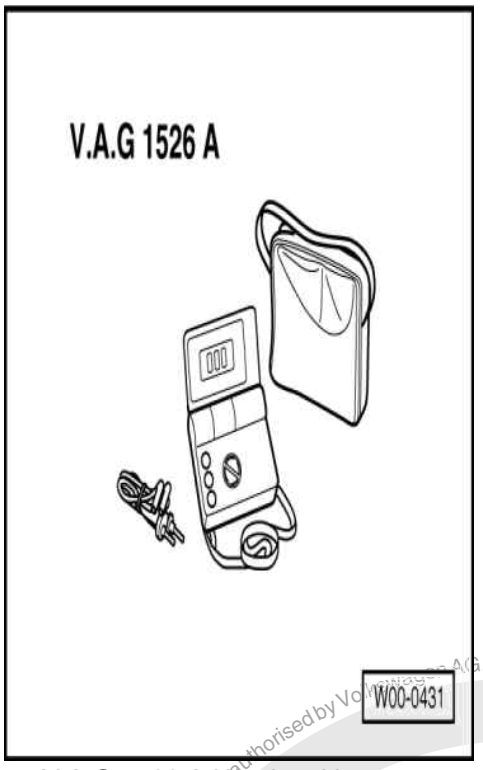

- V.A.G 1526 A Hand multimeter

The test steps from Page 123 are valid for:

- For vehicles on which the self diagnosis does not give any indication of the source of the fault. Work through the complete electrical check.
- For vehicles on which the self diagnosis provides a direct indication of the source of the fault. Only carry out the test steps recommended in the fault table (directed entry).

An overview of all the test steps in the electrical check can be found on Page 122 .

15.2 - Test prerequisites

- Switch ignition and electrical consumers off before commencing the check (headlights, lighting, fan ...).

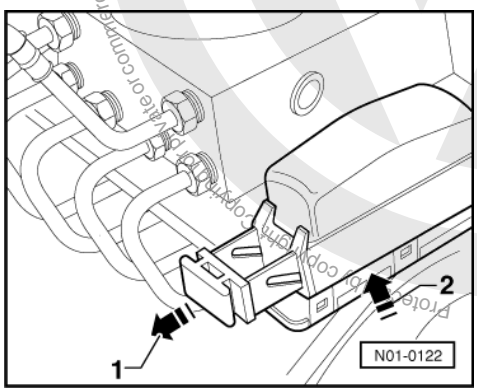

- Fuses SB8, SB15, S177 and S178 must be OK (remove fuses from fuse holder to check).

- -> Release control unit -J104- connector -arrow 1- and pull off -arrow 2-.

satelettronica

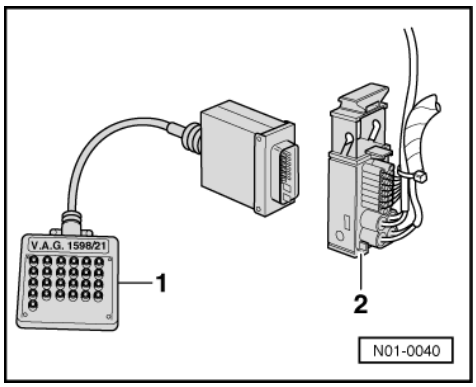

- -> Connect test box V.A.G 1598/21 -1- to multi-pin connector of control unit -J104- -2-.

The specified values are matched to the V.A.G 1526 and are not necessarily applicable for other test units.

15.3 - Multi-pin connector with contact assignment

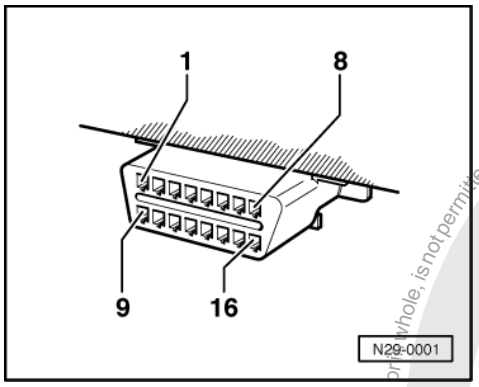

All contacts not listed are currently not assigned and must never be connected to other components!

-> Contact assignment of connectors for voltage supply and self-diagnosis with the fault reader V.A.G 1551

Contact 4	= Earth (terminal 31)
Contact 16	= Positive (terminal 30)
Contact 7	= K wire to contact 7 of multi-pin connector T25 of control unit -J104

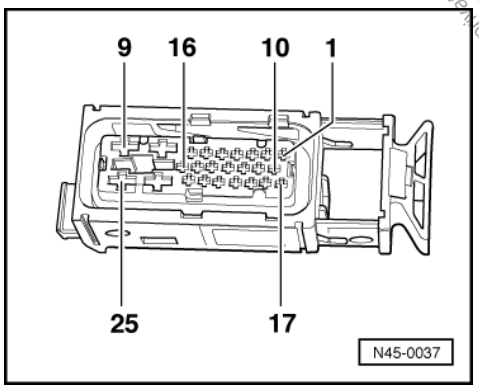

Protected by copyright. Copying for private and commercial purposes, in part or in whole, is not permitted unless authorised by Volkswagen AG. Volkswagen AG does not guarantee or accept any liability with respect to the correctness of information in this document. Copyright by Volkswagen AG.
satelettronica

-> Contact assignment of connector T25 wiring loom/control unit - J104

Contact	Wiring connection to component ...
1	=> Front left speed sensor -G47
2	=> Front left speed sensor -G47
3	=> Vacant
4	=> Voltage supply to ignition switch
5	=> Rear left speed sensor -G46
6	=> Rear left speed sensor -G46
7	=> Connector T16/7, K wire
8	=> Earth point left in engine compartment and earth connection in engine compartment wiring harness
9	=> Voltage supply from battery +
10	=> Data bus wire => Current flow diagrams
11	=> Data bus wire => Current flow diagrams
12	=> Vehicles with navigation system only

Contact	Wiring connection to component ...
13	=> Vacant
14	=> Vehicles with navigation system only
15	=> Vacant
16	=> ABS warning lamp activation
17	=> Vacant
18	=> Brake light switch -F
19	=> Front right speed sensor -G45
20	=> Front right speed sensor -G45
21	=> Vehicles with navigation system only
22	=> Rear right speed sensor -G44
23	=> Rear right speed sensor -G44
24	=> Earth point left in engine compartment and earth connection in engine compartment wiring harness
25	=> Voltage supply from battery +

Test step overview

Component to be tested	
Voltage supply for hydraulic pump -V64- to control unit -J104	- Perform test step 1
Voltage supply for valves in hydraulic unit -N55- to control unit -J104	- Perform test step 2
Voltage supply (terminal X) to control unit -J104	- Perform test step 3
Function of brake light switch -F	- Perform test step 4
Resistance of front right speed sensor -G45	- Perform test step 5
Resistance of front left speed sensor -G47	- Perform test step 6
Resistance of rear right speed sensor -G44	- Perform test step 7
Resistance of rear left speed sensor -G46	- Perform test step 8
Voltage signal of front right speed sensor -G45	- Perform test step 9
Voltage signal of front left speed sensor -G47	- Perform test step 10

satelettronica

Component to be tested	
Voltage signal of rear right speed sensor -G44	- Perform test step 11
Voltage signal of rear left speed sensor -G46	- Perform test step 12
Voltage supply for V.A.G 1551, connector T16	- Perform test step 13
Resistance of K wire for self-diagnosis, connector T16	- Perform test step 14
Function of ABS warning lamp -K47	- Perform test step 15
Function of brake system warning lamp -K118	- Perform test step 16
Function of hydraulic pump V64	- Perform test step 17
Checking data bus wire	- Perform test step 18

15.4 - Test table

Notes on test table

- The socket designations of adapter V.A.G 1598/21 are identical to the control unit -J104- contact designations in current flow diagram.

=> Current flow diagrams, Electrical fault finding and Fitting locations binder

- If the readings obtained deviate from the specifications, carry out fault rectification measure in the right-hand part of the table.

=> Current flow diagrams, Electrical fault finding and Fitting locations binder

- Continuity checks with adapter set V.A.G 1594 A (bridging).
- If the measured figures only deviate slightly from the specifications, clean sockets and plugs of the testers and adapter cables (with contact spray G 000 700 04) and repeat check. Before replacing components, check wiring and connections and also, particularly for specifications of less than 10 ω, repeat resistance check on the component.

Switch to measuring range: Voltage measurement (20 V =)					
Test step	V.A.G 1598 sockets	Item tested	▪ Test conditions - Additional operations	Specification	Measures for deviations from specification
1	8 + 25	Voltage supply for hydraulic pump -V64- to control unit -J104	▪ Ignition switched off	10.0 - 14.5 V	- Check wire using current flow diagram => Current flow diagrams, Electrical fault finding and Fitting locations binder
2	9 + 24	Voltage supply for the valves in hydraulic unit -N55- to control unit -J104	▪ Ignition switched off	10.0 - 14.5 V	- Check wire using current flow diagram => Current flow diagrams, Electrical fault finding and Fitting locations binder

Protected by copyright. Copying for private or commercial purposes, in part or in whole, is not permitted unless authorised by Volkswagen AG. Volkswagen AG does not guarantee or accept any liability with respect to the correctness of information in this document. Copyright by Volkswagen AG.
satelettronica

Switch to measuring range: Voltage measurement (20 V =)					
Test step	V.A.G 1598 sockets	Item tested	▪ Test conditions - Additional operations	Specification	Measures for deviations from specification
3	8 + 4	Voltage supply (terminal X) to control unit -J104	▪ Ignition switched on	10.0 - 14.5 V	- Check wire using current flow diagram => Current flow diagrams, Electrical fault finding and Fitting locations binder
4	8 + 18	Function of brake light switch -F	▪ Ignition switched off ▪ Brake pedal not depressed - Depress brake pedal	0.0 - 0.5 V approx. battery voltage	- Check brake light switch -F- and Read measured value block, display group 003 =>Page 115 - Adjusting brake light switch => Brake system; Repair group 46; Brake pedal - Assembly overview; Adjusting brake light switch Brake pedal - Assembly overview; Adjusting brake light switch - Check wiring using current flow diagram => Current flow diagrams, Electrical fault finding and Fitting locations binder

Switch to measuring range: Resistance measurement (2 kω)					
Test step	V.A.G 1598 sockets	Item tested	▪ Test conditions - Additional operations	Specification	Measures for deviations from specification
5	19 + 20	Resistance of front right speed sensor - G45	▪ Ignition switched off	1.0...1.3 kω	- Check wiring using current flow diagram => Current flow diagrams, Electrical fault finding and Fitting locations binder - Wiggle wiring during test If no fault can be located in the wiring: - Renew speed sensor -G45

Protected by copyright. Copying for private or commercial purpose, in part or in whole is not permitted unless authorised by Volkswagen AG. Volkswagen AG does not guarantee or assume any liability with respect to the correctness of information in this document. Copyright by Volkswagen AG.
satelettronica

Switch to measuring range: Resistance measurement (2 kω)					
					=> Brake systems; Repair group 45; Removing and installing parts of ABS system on front and rear axles Removing and installing parts of ABS system on front and rear axles

Switch to measuring range: Resistance measurement (2 kω)					
Test step	V.A.G 1598 sockets	Item tested	▪ Test conditions - Additional operations	Specification	Measures for deviations from specification
6	1 + 2	Resistance of front left speed sensor - G47	▪ Ignition switched off	1.0...1.3 kω	- Check wiring using current flow diagram => Current flow diagrams, Electrical fault finding and Fitting locations binder - Wiggle wiring during test If no fault can be located in the wiring: - Renew speed sensor -G47 => Brake systems; Repair group 45; Removing and installing parts of ABS system on front and rear axles Removing and installing parts of ABS system on front and rear axles

Switch to measuring range: Resistance measurement (2 kω)					
Test step	V.A.G 1598 sockets	Item tested	▪ Test conditions - Additional operations	Specification	Measures for deviations from specification
7	22 + 23	Resistance of rear right speed sensor - G44	▪ Ignition switched off	1.0...1.3 kω	- Check wiring using current flow diagram => Current flow diagrams, Electrical fault finding and Fitting locations binder - Wiggle wiring during test If no fault can be located in the wiring:

Protected by copyright. Copying for private or commercial purposes, in part or in whole is not permitted unless authorised by Volkswagen AG. Volkswagen AG does not guarantee or accept any liability with respect to the correctness of information in this document. Copyright by Volkswagen AG.
satelettronica

Switch to measuring range: Resistance measurement (2 kω)					
					- Renew speed sensor -G44 => Brake systems; Repair group 45; Removing and installing parts of ABS system on front and rear axles Removing and installing parts of ABS system on front and rear axles

Switch to measuring range: Resistance measurement (2 kω)					
Test step	V.A.G 1598 sockets	Item tested	▪ Test conditions - Additional operations	Specification	Measures for deviations from specification
8	5 + 6	Resistance of rear left speed sensor -G46	▪ Ignition switched off	1.0...1.3 kω	- Separate connector on speed sensor -G46 - Check wiring using current flow diagram => Current flow diagrams, Electrical fault finding and Fitting locations binder - Wiggle wiring during test If no fault can be located in the wiring: - Renew speed sensor -G46 => Brake systems; Repair group 45; Removing and installing parts of ABS system on front and rear axles Removing and installing parts of ABS system on front and rear axles

Switch to measuring range: Voltage measurement (2 V font=symbol charset=fontspecific code=64 descr='[ap]')					
Test step	V.A.G 1598 sockets	Item tested	▪ Test conditions - Additional operations	Specification	Measures for deviations from specification
9	19 + 20	Front right speed sensor -G45- voltage signal	▪ Vehicle raised ▪ Ignition switched off		- Check installation of speed sensor -G45- and rotor.

Protected by copyright. Copying for private or commercial purposes, in part or in whole, is not permitted unless authorised by Volkswagen AG. Volkswagen AG does not guarantee or assume any liability with respect to the correctness of information in this document. Copyright by Volkswagen AG.
satelettronica

Switch to measuring range: Voltage measurement (2 V font=symbol charset=fontspecific code=64 descr='[ap]')					
			- Rotate front right wheel at approx. 1 rev./sec.	min. 65 mV alternating voltage	- Check whether speed sensor -G45- has been interchanged andRead measured value block =>Page 115 , display group number 001
10	1 + 12	Front left speed sensor -G47- voltage signal	▪ Vehicle raised ▪ Ignition switched off - Rotate front left wheel at approx. 1 rev./sec.	min. 65 mV alternating voltage	- Check installation of speed sensor -G47- and rotor. - Check whether speed sensor -G47- has been interchanged andRead measured value block =>Page 115 , display group number 001

Switch to measuring range: Voltage measurement (2 V font=symbol charset=fontspecific code=64 descr='[ap]')					
Test step	V.A.G 1598 sockets	Item tested	▪ Test conditions - Additional operations	Specification	Measures for deviations from specification
11	22 + 23	Rear right speed sensor -G44- voltage signal	▪ Vehicle raised ▪ Ignition switched off - Rotate rear right wheel at approx. 1 rev./sec.	min. 190 mV alternating voltage	- Check installation of speed sensor -G44- and rotor. - Check whether speed sensor -G44- has been interchanged andRead measured value block =>Page 115 , display group number 001
12	6 + 5	Rear left speed sensor -G46- voltage signal	▪ Vehicle raised ▪ Ignition switched off - Rotate rear left wheel at approx. 1 rev./sec.	min. 190 mV alternating voltage	- Check installation of speed sensor -G46- and rotor. - Check whether speed sensor -G46- has been interchanged andRead measured value block =>Page 115 , display group number 001

Protected by copyright. Copying for private or commercial purposes, in part or in whole, is not permitted unless authorised by Volkswagen AG. Volkswagen AG does not guarantee or accept any liability with respect to the correctness of information in this document. Copyright by Volkswagen AG.
sataelettronica

Switch to measuring range: Voltage measurement (20 V =)					
Test step	V.A.G 1598 sockets	Item tested	▪ Test conditions - Additional operations	Specification	Measures for deviations from specification
13	-	Supply voltage for V.A.G 1551, connector T161)	▪ Ignition switched off Connect hand multimeter V.A.G 1526 using adapter set V.A.G 1594 to connector T161)	10.0 -14.5 V	- Check wiring using current flow diagram => Current flow diagrams, Electrical fault finding and Fitting locations binder

1) Diagnosis connector contact assignment =>Page 121 .

Switch to measuring range: Resistance measurement 200 ω					
Test step	V.A.G 1598 sockets	Item tested	▪ Test conditions - Additional operations	Specification	Measures for deviations from specification
14	-	Resistance of K wire for V.A.G 1551 connector T161)	▪ Ignition switched off Disconnect multi-pin connector from control unit -J104 - Connect test box V.A.G 1598/21 - Connect multimeter V.A.G 1526 to contacts T16/71) and T25/7 of multi-pin connectors from control unit -J104- using adapter set V.A.G 1594	max. 1.5 ω	- Check wiring using current flow diagram => Current flow diagrams, Electrical fault finding and Fitting locations binder

1) Diagnosis connector contact assignment =>Page 121 .

Functional check: ABS warning lamp -K47					
Test step	V.A.G 1598 sockets	Item tested	▪ Test conditions - Additional operations	Specification	Measures for deviations from specification
15	-	Function of ABS warning lamp - K47	▪ Switch ignition on	Warning lamp - K47- lights up for approx. 2 seconds and goes out again	- Check wiring using current flow diagram

© Copyright Volkswagen AG does not guarantee the correctness of information in this document. Copyright by Volkswagen AG. Copying for private or commercial purposes, in part or in whole, is not permitted unless authorised by Volkswagen AG. Volkswagen AG does not guarantee the correctness of information in this document. Copyright by Volkswagen AG.

satelettronica

Functional check: ABS warning lamp -K47					
					=> Current flow diagrams, Electrical fault finding and Fitting locations binder - Fault in dash panel insert => General body repairs, interior; Repair group 70; Dash panel

Functional check: Brake system warning lamp -K118					
Test step	V.A.G 1598 sockets	Item tested	▪ Test conditions - Additional operations	Specification	Measures for deviations from specification
16	-	Function of brake system warning lamp -K118	▪ Handbrake not applied ▪ Brake fluid level is OK ▪ Switch ignition on - Apply handbrake	Warning lamp -K118- does not light Warning lamp -K118- lights up	- Check wiring using current flow diagram => Current flow diagrams, Electrical fault finding and Fitting locations binder - Fault in dash panel insert => General body repairs, interior; Repair group 70; Dash panel

Functional check: Hydraulic pump -V64					
Test step	V.A.G 1598 sockets	Item tested	▪ Test conditions - Additional operations	Specification	Measures for deviations from specification
17	-	Function of ABS hydraulic pump -V64-	▪ Ignition switched off Pull connector T2f off ABS hydraulic pump -V64- on control unit -J104 - Connect earth and T2f/2 battery voltage to ABS hydraulic pump connector -V64- T2f/1	Hydraulic pump -V64- runs fault free (max. 10 secs.) Hydraulic pump -V64- does not run	- Perform final control diagnosis => Page 27 . Renew control unit -J104-. - Renew hydraulic unit. => Brake system; Repair group 45

Switch to measuring range: Resistance measurement (200 ω/20 M ω)

Copyright by Volkswagen AG. Volkswagen AG does not guarantee or accept any liability with respect to the correctness of information in this document. Copying for private or commercial purposes, in part or in whole, is not permitted unless authorised by Volkswagen AG. Protected by copyright.

satelettronica

Test step	V.A.G 1598 sockets	Item tested	▪ Test conditions - Additional operations	Specification	Measures for deviations from specification
18		Data bus wiring	▪ Ignition switched off ▪ Set to measuring range 200 ω - Disconnect multi-pin connection from a control unit which is connected via data bus wiring: - Connect test box V.A.G 1598/21 - Check data bus wiring for open circuit	max. 1.5 ω	- Check wiring using current flow diagram => Current flow diagrams, Electrical fault finding and Fitting locations binder
				Test step 18: Continued on next page.	

Continuation of test step 18					
Test step	V.A.G 1598 sockets	Item tested	▪ Test conditions - Additional operations	Specification	Measures for deviations from specification
			▪ Set to measuring range 20 M ω - Remove fuse SB 8 - Check wiring for short circuit to positive or earth	∞ ω	- Check wiring using current flow diagram => Current flow diagrams, Electrical fault finding and Fitting locations binder

Protected by copyright. Copying for private or commercial purposes, in part or in whole, is not permitted unless authorised by Volkswagen AG. Volkswagen AG does not guarantee or accept any liability with respect to the correctness of information in this document. Copyright by Volkswagen AG.

satelettronica

16 - Function of self-diagnosis, ABS/EDL/TCS/ESP ITT Mark 20 IE

16.1 - Function of self-diagnosis, ABS/EDL/TCS/ESP ITT Mark 20 IE

The ESP (Electronic Stability Programme) is an electronic dynamics programme (EDP). It stabilizes the vehicle when oversteering or understeering. The ESP works over the whole speed range. If the ESP is regulating the system the ESP warning lamp will flash 3 times per second.

The ESP is a further extension of the familiar vehicle safety systems.

ESP increases control over the vehicle in critical situations. It reduces the danger of skidding and increases the steering control when compared with familiar vehicle safety systems.

16.2 - Function

As the control units are interconnected with a data bus wire, always start fault finding by interrogating fault memories of all the control units in the vehicle.

This occurs in "Automatic test sequence" and is activated with key function 00.

When doing this, check to see if there are faults stored which may influence the ABS.

The self-diagnosis relates to the electrical/electronic part of the ABS, in other words only faults via the electrical connection to the control unit are recognised (e.g. speed sensor open circuit).

The 47-pin ABS control unit -J104- forms with the hydraulic unit a compact unit. The unit is located on the left of the engine compartment. The control unit is equipped with a fault memory. The self-diagnosis connection is located in centre console below the ashtray insert.

The control unit recognises faults and malfunctions during vehicle operation and stores them in a permanent memory, the contents of which remain despite the lack of battery voltage.

Sporadic (irregular) faults will also be recognised. But if these faults do not occur again within the next 15 vehicle starts and driving off sequences for faults which affect the data bus system, or 50 vehicle starts and driving off sequences for other faults, they will be erased from fault memory except for the fault "Control unit defective" (forget fault counter).

After the ignition is switched on and/or the engine is started, the ABS warning lamp -K47- and the ESP warning lamp -K155- will light up for approx. 2 seconds.

During this period a test sequence (self-check) is run in the control unit for the following functions:

- To check if the supply voltage is at least 10.0 Volt,
- To check control unit including the valve windings,
- To check the coding of the control unit,
- A static check of the speed sensor (no speed signal),
- If after driving off and exceeding a speed of approx. 20 km/h (approx. 13 mph) the speed signal is not OK. the ABS warning lamp -K47- will light up again.

Fault reader V.A.G 1551 or tester VAS 5051

The self-diagnosis must be initiated always at the commencement of fault finding. Electrical faults which influence the braking characteristics will be stored. They can be interrogated with the fault reader V.A.G 1551 or with the new tester VAS 5051.

The fault information displayed is used in conjunction with a fault table which has information on the possible fault causes for pin-pointed repair measures.

16.3 - Allocation of ABS/EDL/TCS/ESP ITT MARK 20 IE

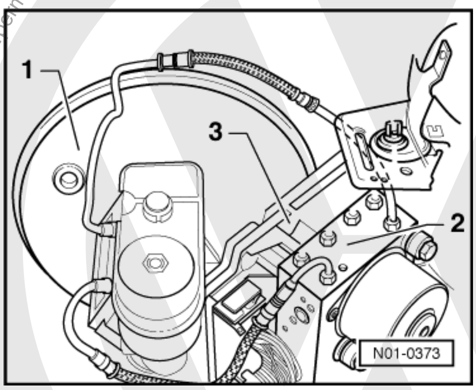

Left-hand drive

The brake servo boost is produced by vacuum pressure.

-> Distinguishing features:

1- 9" brake servo

Protected by copyright. Copying for private or commercial purposes, in part or in whole, is not permitted unless authorised by Volkswagen AG. Volkswagen AG does not guarantee or accept any liability with respect to the correctness of information in this document. Copyright by Volkswagen AG.

satelettronica

2- Hydraulic unit
3- Control unit, 47-pin (bolted to hydraulic unit)

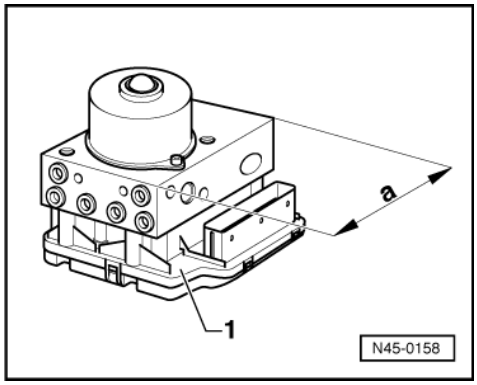

-> Distinguishing features of ABS/EDL/TCS/ESP Mark 20 IE hydraulic unit, left and right-hand drive

- Dimension -a- 135 mm vehicles with ABS/EDL/TCS/ESP

  1- Control unit, 47-pin (bolted to hydraulic unit)

16.4 - Self-diagnosis technical data

Control unit identification

The control unit version is displayed when fault reader V.A.G 1551 or the new tester VAS 5051 is connected and the control unit for brake electronics is selected => Page 147 .

1C0 907 379 ABS/ESP

Fault memory

A non-volatile memory ensures that the contents of the fault memory are retained even without a voltage supply.

Data output takes place on fault reader V.A.G 1551 in operating mode 1 (rapid data transfer), and on tester VAS 5051 in operating mode "vehicle self-diagnosis".

16.5 - Safety precautions and fundamental points regarding fault finding

- The ABS is a vehicle safety system; the appropriate knowledge is necessary to work on the system.
- In order to check complaints and to be able to carry out pin-pointed fault finding, the fault memory must be interrogated before commencing work on the ABS system.
- Only separate connectors when the ignition is switched off.
- Observe the appropriate instructions regarding the handling of brake fluid.

=> Brake systems; Repair group 47

=> Special Information, Running gear No. 21

- ABS faults are indicated by the ABS warning lamp lighting up. Certain faults will only be recognised at speeds above 20 km/h (approx. 13 mph) (carry out road test).
- If the ABS -K47- and the brake system -K118- warning lamps do not light up, but the brake system is not functioning correctly then the fault must be sought in the conventional braking system.

=> Brake systems; Repair group 45

Protected by copyright. Copyright by Volkswagen AG. Volkswagen AG does not guarantee or accept any liability with respect to the correctness of information in this document. Copyright by Volkswagen AG. Reproduction, in whole or in part, is prohibited unless authorised by Volkswagen AG. Commercial purposes, in part or in whole, is not permitted unless authorised by Volkswagen AG.
satelettronica

- Information on eliminating current defects

=> Technical Service Handbook.

Necessary technical information

Current flow diagrams, Electrical fault finding and Fitting locations binder
Workshop Manual Polo 1995 ‣ Brake systems
Workshop Manual Polo 1995 ‣ Running gear, axles, steering
Technical service handbook

16.6 - Fault finding with fault reader V.A.G 1551 or tester VAS 5051 on ABS/EDL/TCS/ESP ITT Mark 20 IE (flow chart)

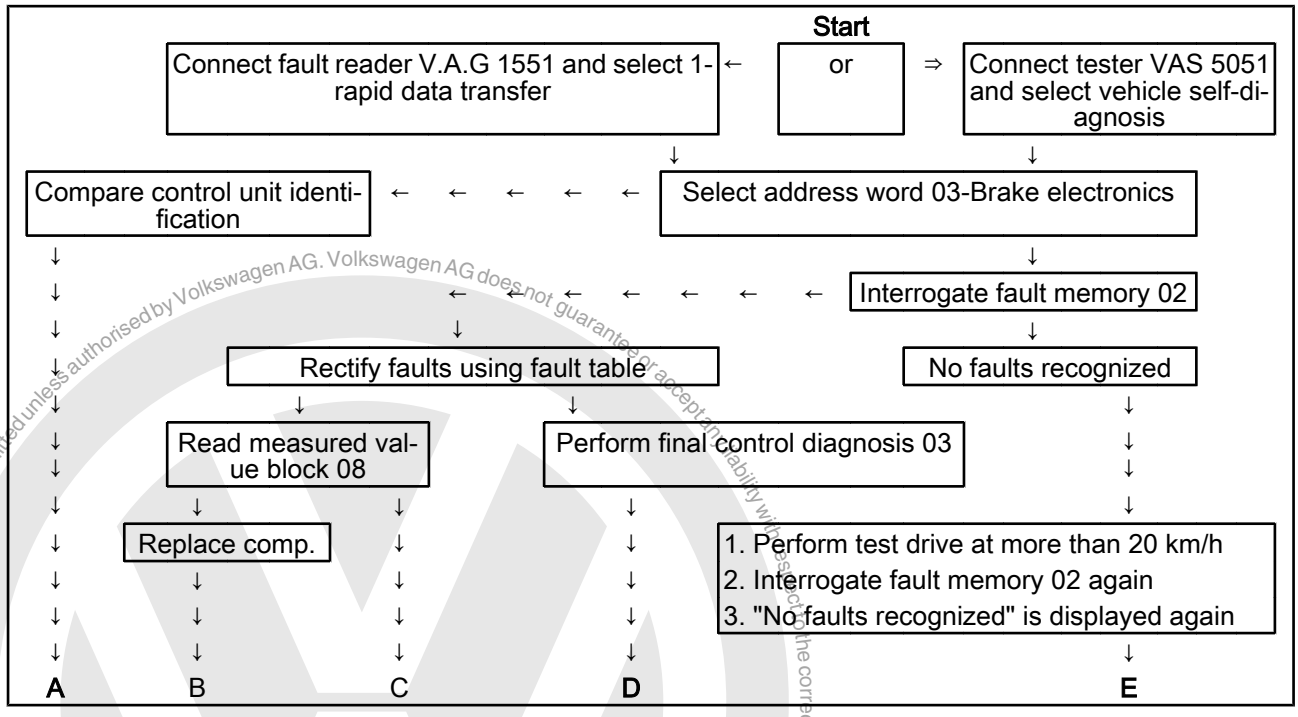

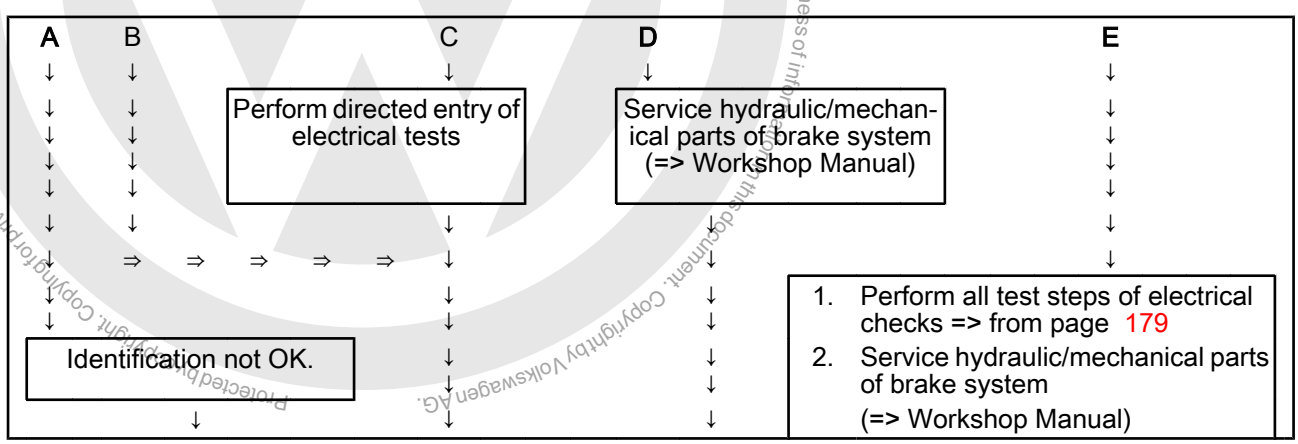

Protected by copyright. Copying for private or commercial purposes, in part or in whole, is not permitted unless authorised by Volkswagen AG. Volkswagen AG does not guarantee or accept any liability with respect to the correctness of information in this document. Copyright by Volkswagen AG.
satelettronica

A	B	C	D	E
	Renew control unit	↓	↓	↓
	↓	↓	↓	↓

- Connect fault reader V.A.G 1551 or tester VAS 5051 and interrogate fault memory 02 again.
- Erase fault memory (05)
- Perform test drive at more than 20 km/h (13 mph) and perform a ABS regulation.
- Interrogate fault memory again after test drive. If "No fault recognized" appears on display of fault reader V.A.G 1551 or tester VAS 5051 after rectifying faults and performing test drive, the self-diagnosis is completed.

Protected by copyright. Copying for private or commercial purposes, in part or in whole, is not permitted unless authorised by Volkswagen AG. Volkswagen AG does not guarantee or accept any liability with respect to the correctness of information in this document. Copyright by Volkswagen AG.

17 - Electrical/electronic components and fitting locations

17.1 - Electrical/electronic components and fitting locations

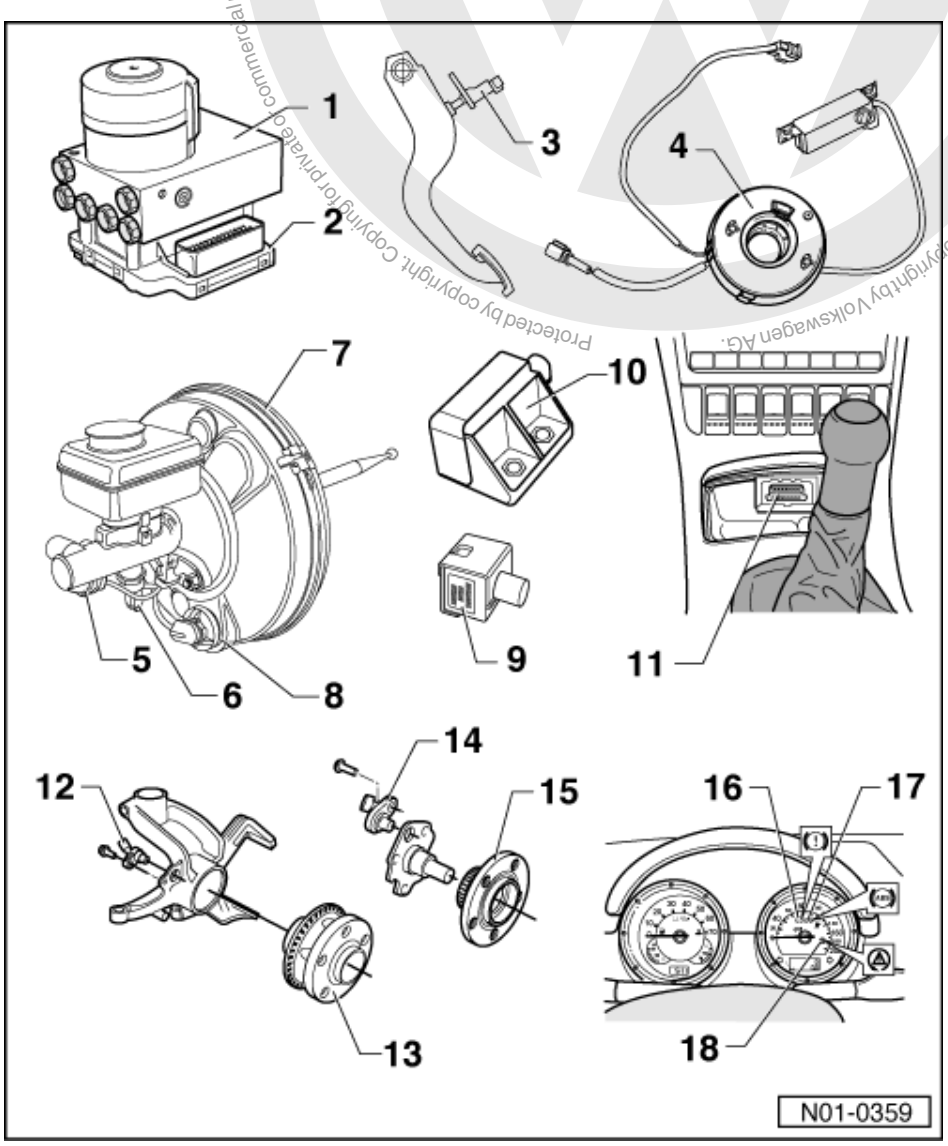

1 ABS/EDL/TCS/ESP hydraulic unit -N55

- Located on left of engine compartment.
- The hydraulic pump -V64- and the inlet/outlet valves in the hydraulic unit are checked by self-diagnosis
- The hydraulic pump -V64- and valve block must not be separated from one another

satelettronica

- Removing and installing

=> Brake systems; Repair group 45

- When changing the hydraulic unit, always seal the old part with the plugs from the repair set Part No. 1H0 698 311 A

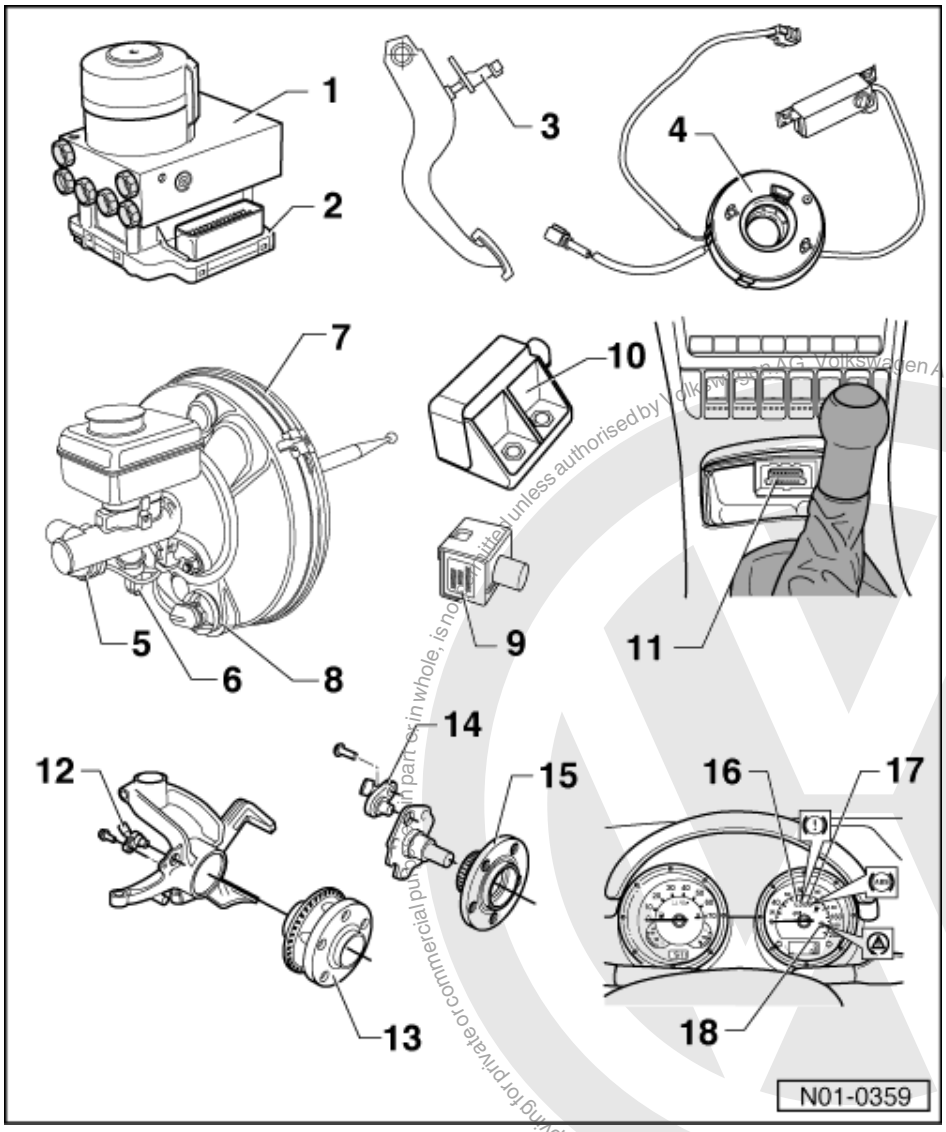

2 ABS/EDL/TCS and ESP control unit -J104

- Location: on hydraulic unit on left of engine compartment
- Checked by self-diagnosis
- Checking the multi-pin connector to control unit =>Page 180
- Do not disconnect connector before successfully completing self-diagnosis. Switch ignition off before separating connection.
- When the control unit -J104- is changed, a zero compensation must be performed
- Introduce basic setting => Page 171 , display group numbers 60, 63 and 66

satelettronica

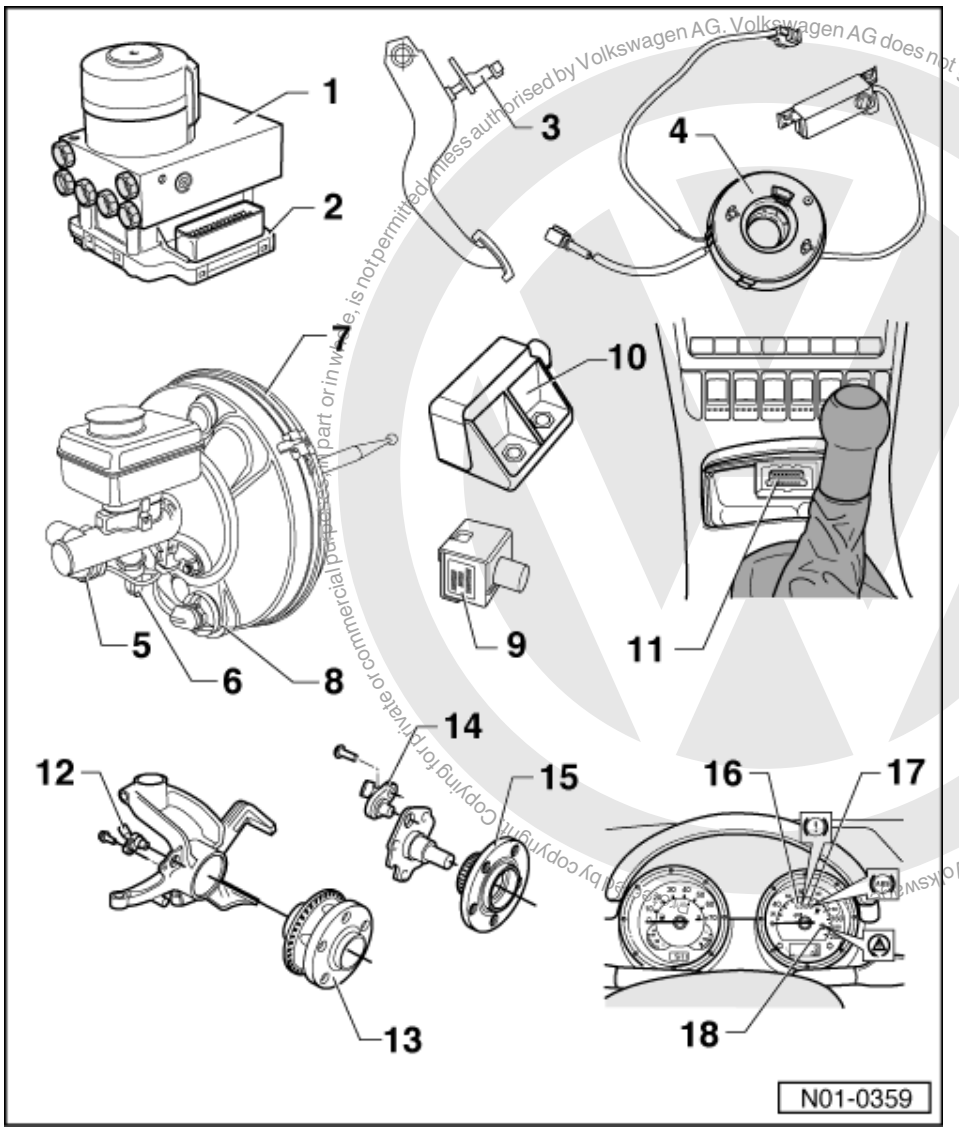

Volkswagen AG. Volkswagen AG does not guarantee or accept any liability with respect to the correctness of information in this document. Copyright by Volkswagen AG. Copying for private or commercial purposes, in part or in whole, is not permitted unless authorised by Volkswagen AG.

satelettronica

3 Brake light switch -F

- The brake light switch is open in the rest position;
- Can be checked via read measured value block => Page 165
- Adjusting

=> Brake system; Repair group 46; Brake pedal - Assembly overview; Adjusting brake light switch Brake pedal - Assembly overview Adjusting brake light switch

4 Steering angle sender -G85

- Location: On steering column between steering wheel and steering column switch.
- Checked by self-diagnosis
- Can be checked via read measured value block => Page 165
- Observe installation instructions

=> Running gear, Axles, Steering; Repair group 48

- When the steering angle sender -G85- is changed, a zero compensation must be performed
- Introduce basic setting => Page 171 , display group number 60

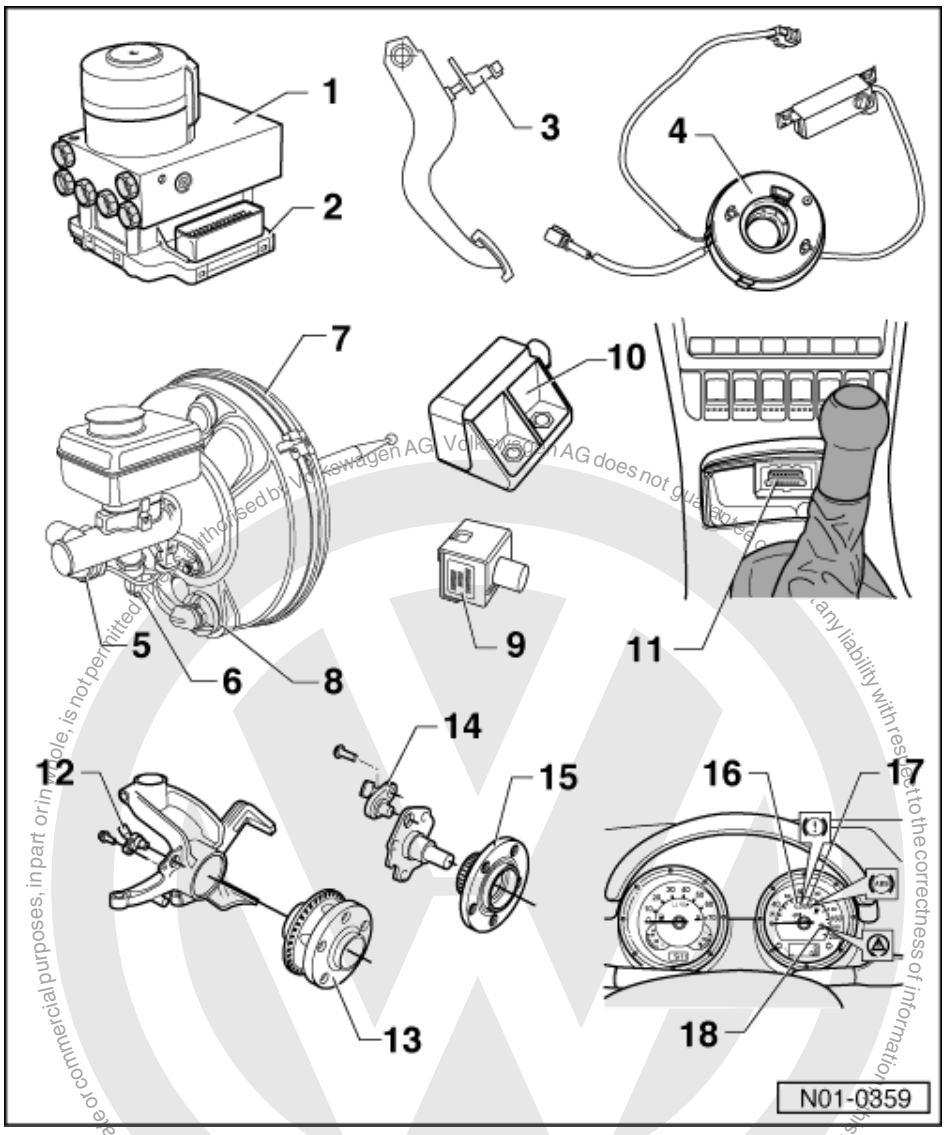

5 Brake pressure sender 1 -G201

- Location for brake pressure sender 1 -G201- can also be fitted in position 6 brake pressure sender 2 -G214-
- Checked by self-diagnosis
- Can be checked via read measured value block => Page 165
- Removing and installing

=> Brake systems; Repair group 47; Vehicles with ABS/EDL/TCS/ESP Vehicles with ABS/EDL/TCS/ESP

- When the brake pressure sender -G201- is changed, a zero compensation must be performed
- Introduce basic setting => Page 171 , display group number 66

satelettronica

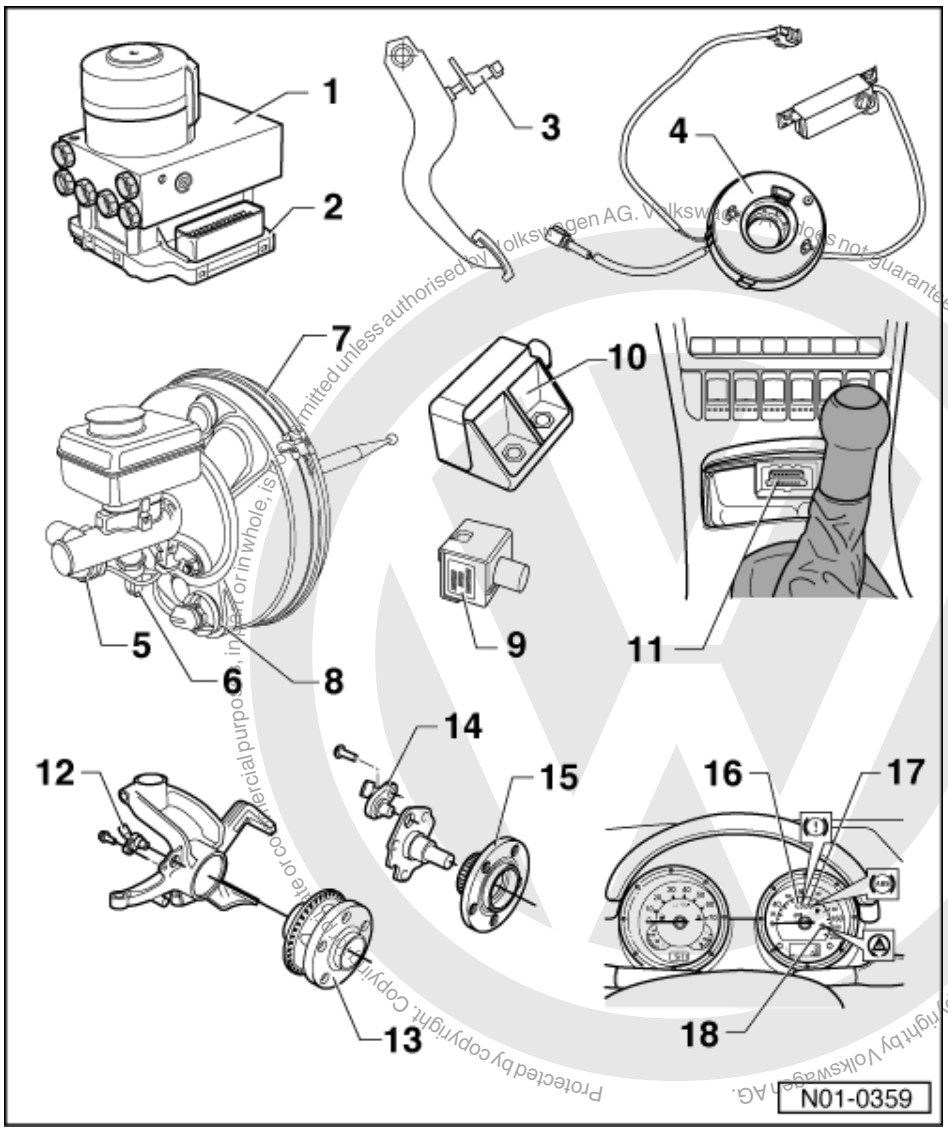

Protected by copyright. Copyright by Volkswagen AG. Volkswagen AG does not guarantee or accept any liability with respect to the correctness of information in this document. Copyright by Volkswagen AG. Reproduction or commercial purposes, in part or in whole, is not permitted unless authorised by Volkswagen AG.

6 Brake pressure sender 2 -G214

- Location for brake pressure sender 2 -G214- can also be fitted in position 5 brake pressure sender 1 -G201-
- Checked by self-diagnosis
- Can be checked via read measured value block => Page 165
- Removing and installing

=> Brake systems; Repair group 47; Vehicles with ABS/EDL/TCS/ESP Vehicles with ABS/EDL/TCS/ESP

- When the brake pressure sender -G214- is changed, a zero compensation must be performed
- Introduce basic setting => Page 171 , display group number 66

satelettronica

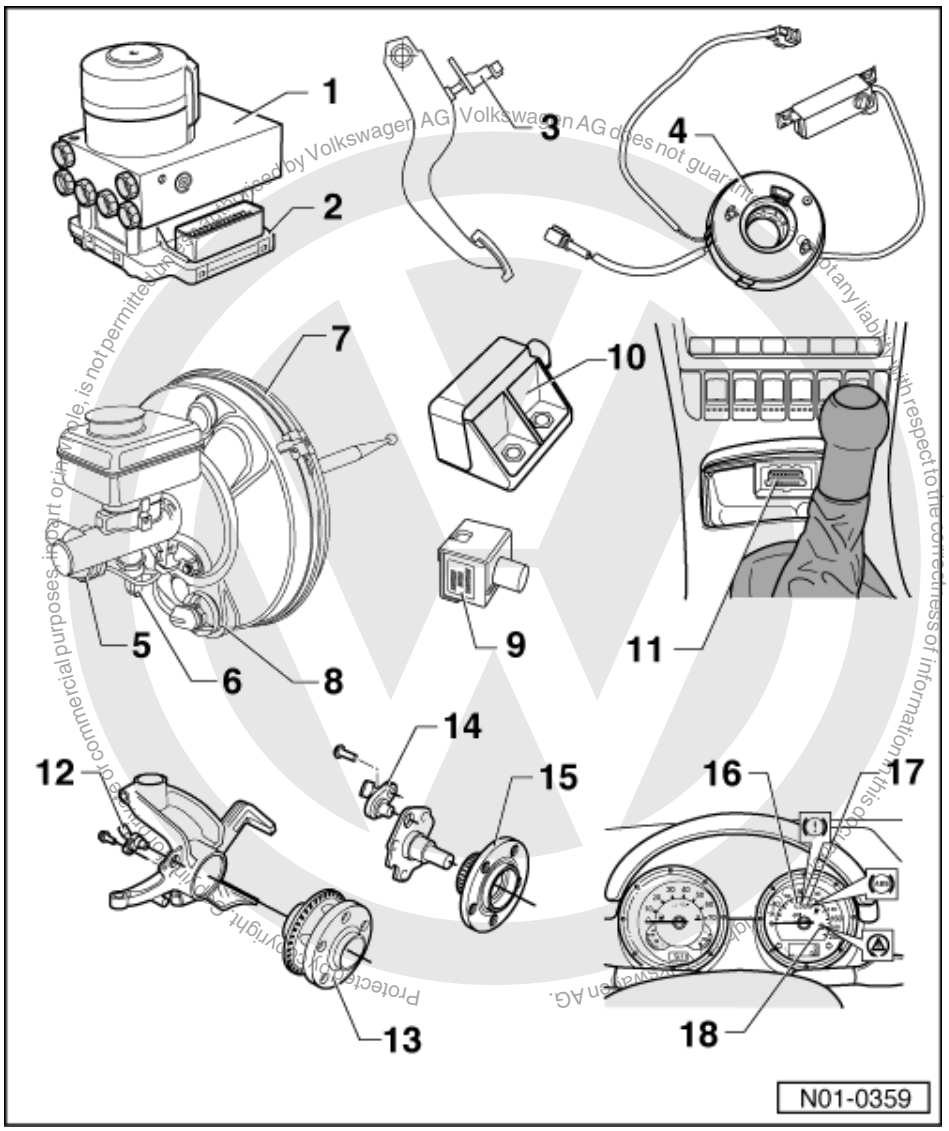

7 Brake servo

The brake servo consists of the following components:

- Brake pressure solenoid trip switch -F84
- Can be checked via read measured value block => Page 165
- Brake pressure solenoid -N247
- Checked by self-diagnosis
- Removing and installing

=> Brake systems; Repair group 47; Vehicles with ABS/EDL/TCS/ESP Vehicles with ABS/EDL/TCS/ESP

8 Opening for cables

- Brake pressure solenoid trip switch -F84
- Brake pressure solenoid -N247

satelettronica

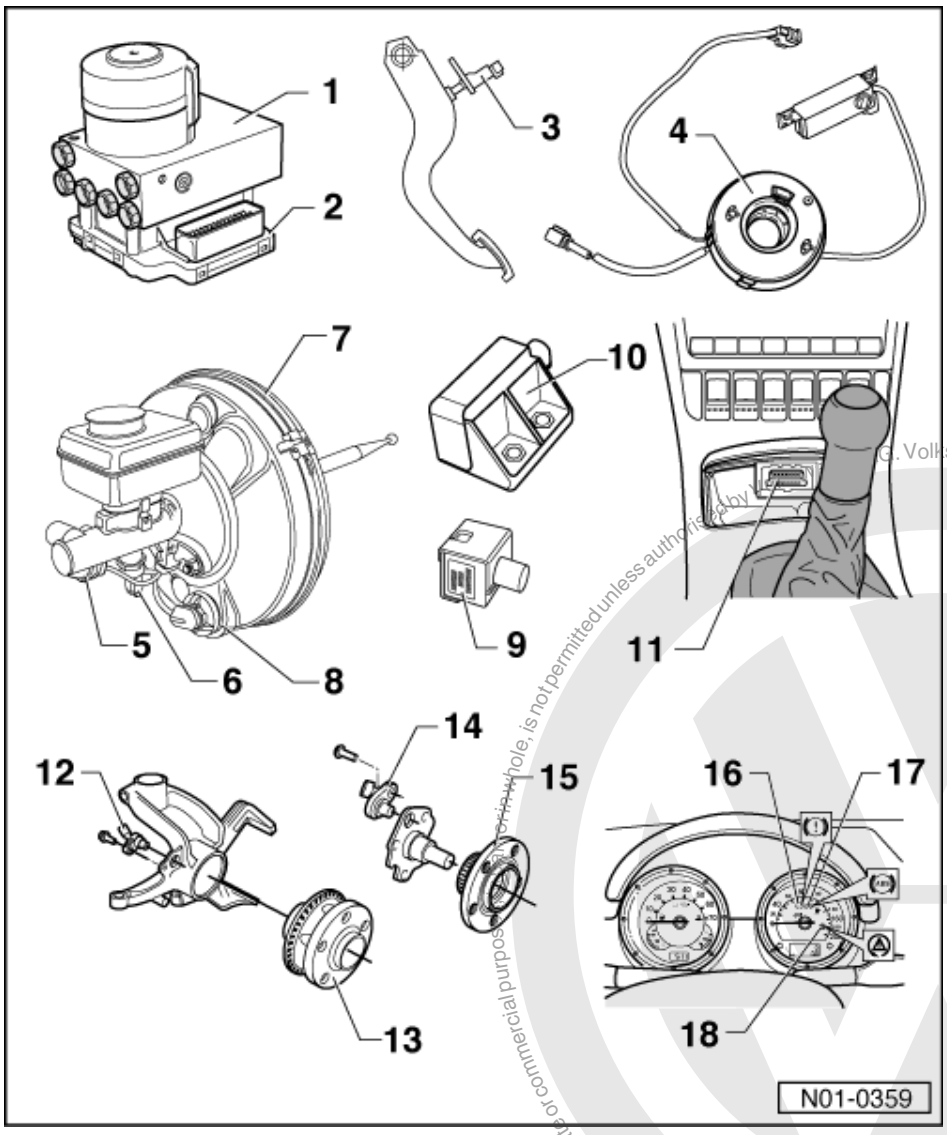

9 Lateral acceleration sensor -G200

- Location: Below centre console
- Checked by self-diagnosis
- Can be checked via read measured value block => Page 165
- Observe installation instructions

=> Brake systems; Repair group 45

- When the lateral acceleration sensor -G200- is changed, a zero compensation must be performed
- Introduce basic setting => Page 171 , display group number 63

Protected by copyright. Copying for private or commercial purposes, in whole or in part, is not permitted unless authorised by Volkswagen AG. Volkswagen AG does not guarantee or accept any liability with respect to the correctness of information in this document. Copyright by Volkswagen AG.
satelettronica

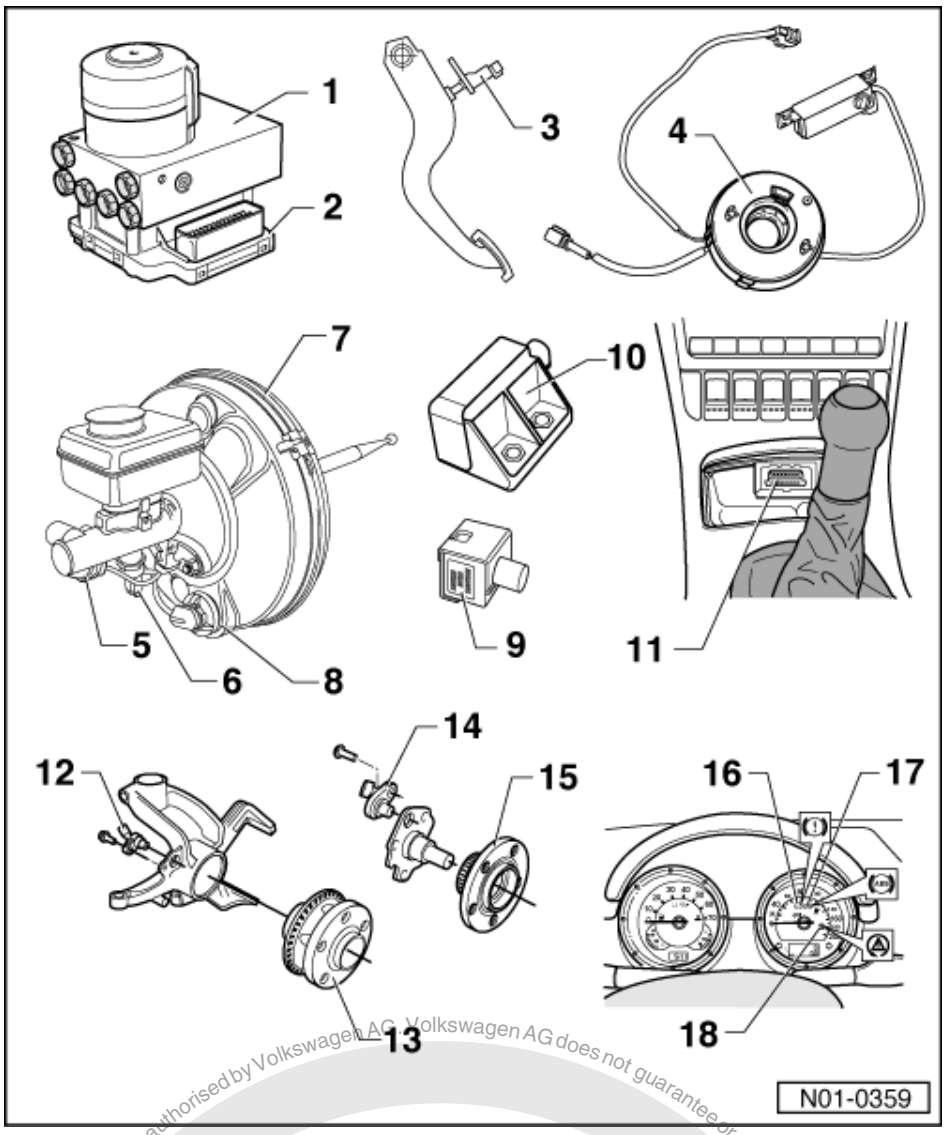

10 Yaw rate sender -G202

- Location: Below centre console
- Checked by self-diagnosis
- Can be checked via read measured value block => Page 165
- Observe installation instructions

=> Brake systems; Repair group 45

11 Diagnostic connections

- Fitting location: in centre console below ashtray

Protected by copyright. Copying for private or commercial purposes, in part or in whole, is not permitted unless authorised by Volkswagen AG. Volkswagen AG does not guarantee or accept any liability with respect to the correctness of information in this document. Copyright by Volkswagen AG.

satelettronica

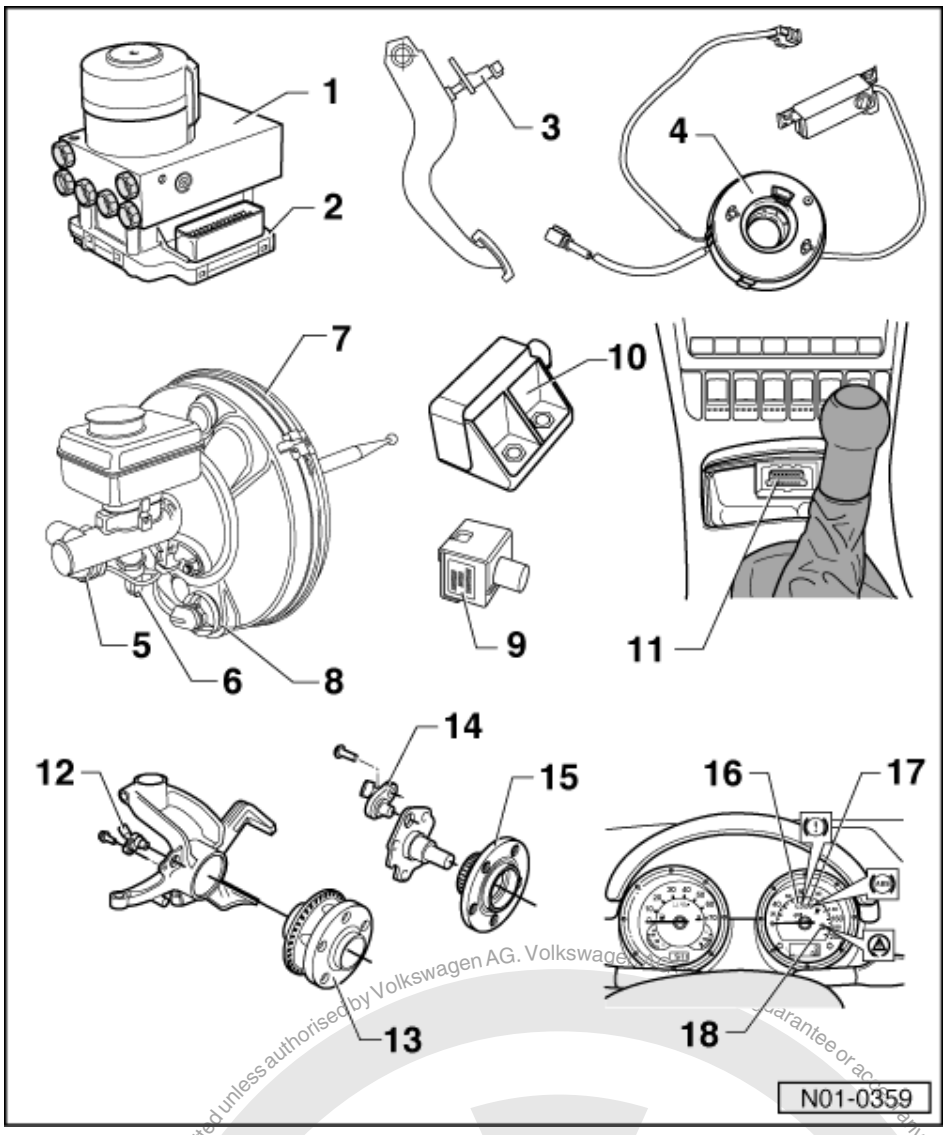

12 Front right/left speed sensor -G45-/-G47

- Checked by self-diagnosis
- Before inserting the sensor clean the inner surface of the sensor mounting and coat with lubricating paste G 000 650
- When connecting the speed sensor wire ensure it is not twisted in the wheel housing
- Securing bolt tightening torque
  - 10 Nm

satelettronica
Protected by copyright. Copying for private or commercial purposes, in part or in whole, is not permitted unless authorised by Volkswagen AG. Volkswagen AG does not guarantee or accept any liability with respect to the correctness of information in this document. Copyright by Volkswagen AG.

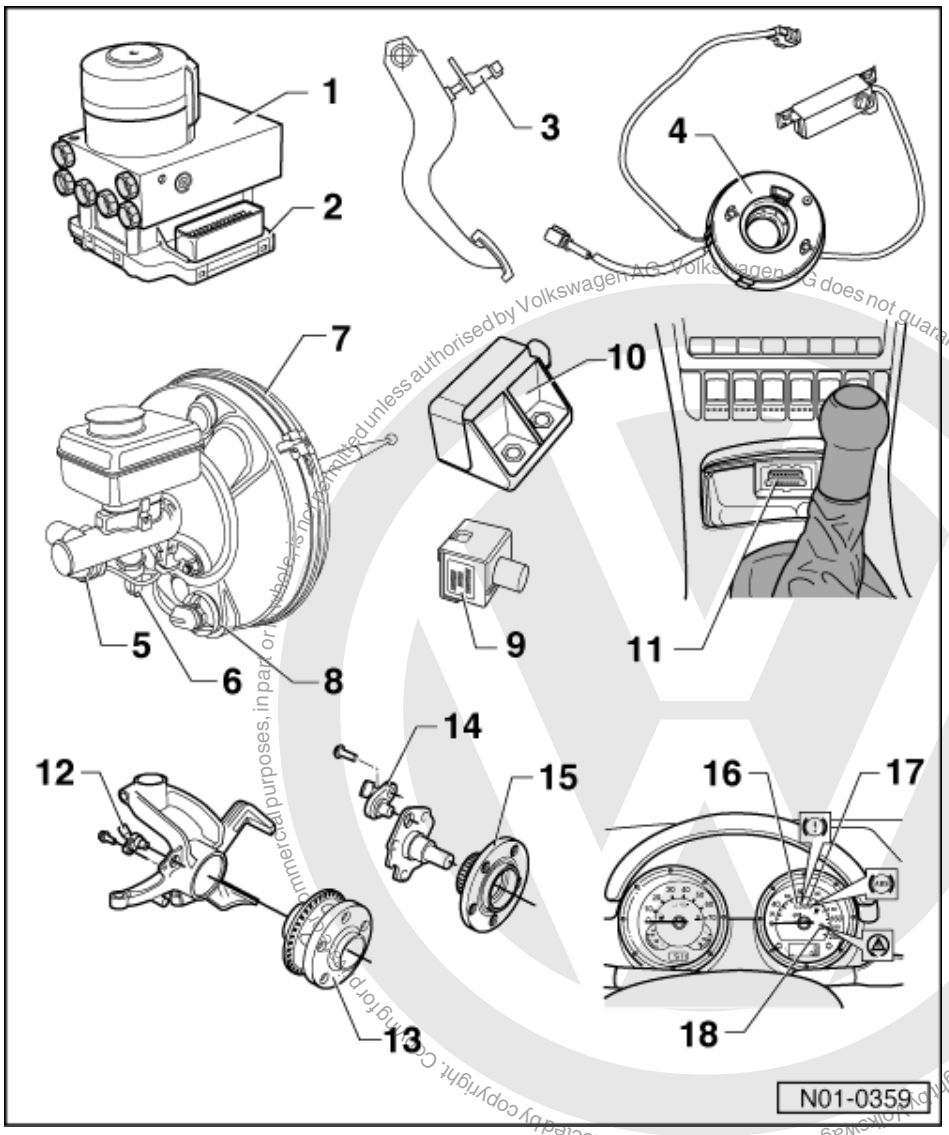

Protected by copyright. Copying for commercial purposes, in part or whole, is not permitted unless authorised by Volkswagen AG. Volkswagen AG does not guarantee or accept any liability with respect to the correctness of information in this document. Copyright by Volkswagen AG.

13 Wheel hub with rotor for speed sensors

- Rotor and speed senders for front left and right-hand sides are identical
- Removing and installing

=> Running gear, Axles, Steering; Repair group 40; Servicing front suspension Servicing front suspension

14 Rear right/left speed sensor -G44-/-G46

- Checked by self-diagnosis
- Before inserting the sensor clean the inner surface of the sensor mounting and coat with lubricating paste G 000 650
- When connecting the speed sensor wire ensure it is not twisted in the wheel housing
- Securing bolt tightening torque
  - 10 Nm

satelettronica

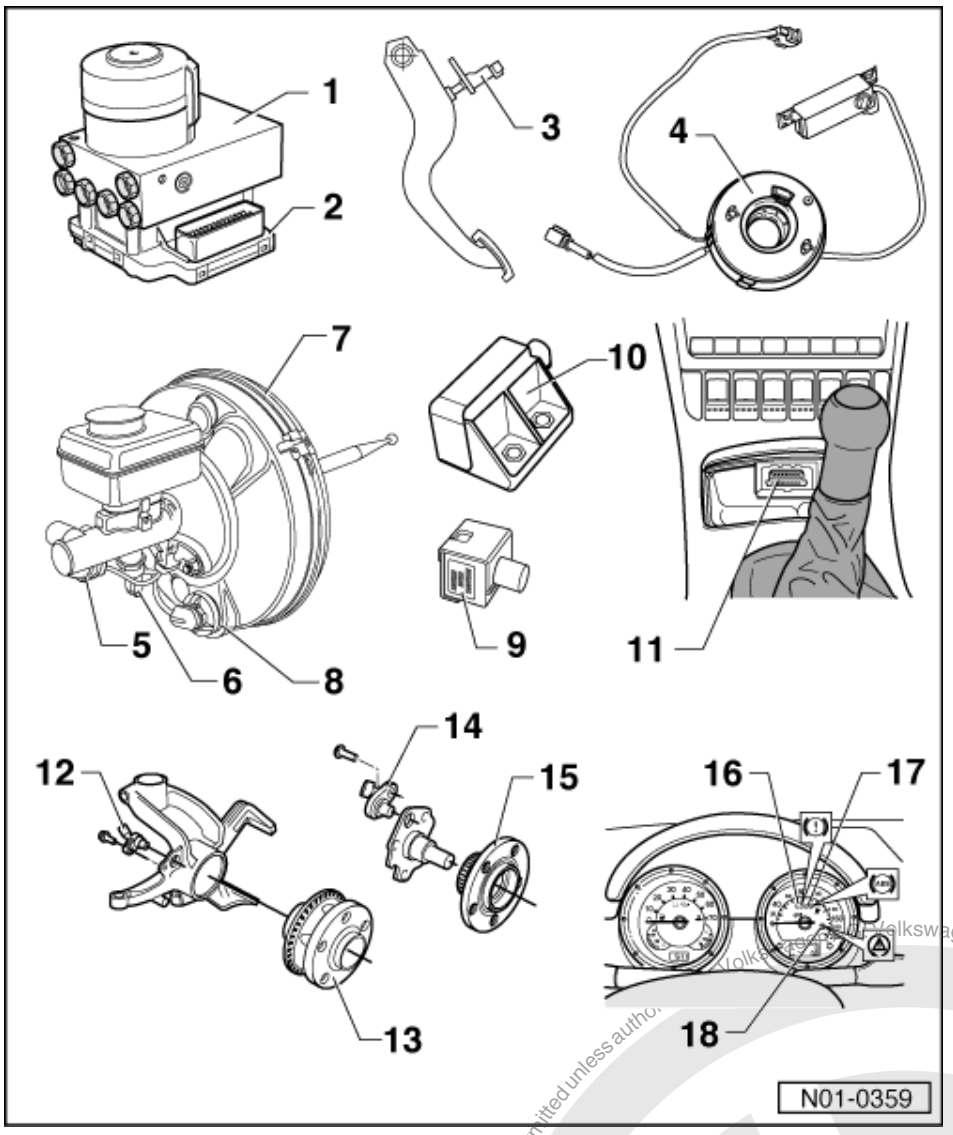

15 Wheel hub with rotor for speed sensors

- Rotor and speed senders for rear left and right-hand sides are identical
- Removing and installing

=> Running gear, axles, steering; Repair group Gr. 42; Servicing wheel bearings

16 Brake system warning lamp -K118

- Location: In the dash panel insert
  Function: =>Page 145

17 ABS warning lamp -K47

- Location: In the dash panel insert
  Function: =>Page 145

18 Stability programme warning lamp -K155

- Location: In the dash panel insert
  Function: =>Page 145

Protected by copyright. Copying for private or commercial purposes, in part or in whole, is not permitted unless authorised by Volkswagen AG. Volkswagen AG does not guarantee or accept any liability with respect to the correctness of information in this document. Copyright by Volkswagen AG.
satelettronica

18 - Faults displayed by warning lamps K 47, K118 and K155

18.1 - Faults displayed by warning lamps K 47, K118 and K155

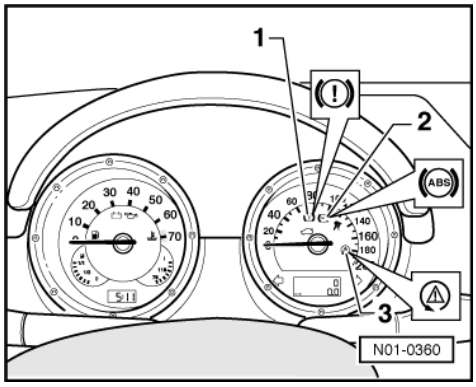

-> Warning lamps

Item	Designation
1	Brake system warning lamp -K118
2	ABS warning lamp -K47
3	Stability programme warning lamp -K155

Warning lamp -K47

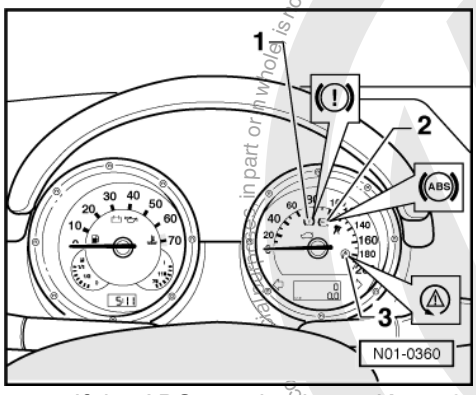

- -> If the ABS warning lamp -K47- -2- does not go out after switching ignition on and completion of test sequence then the fault may be:

  -a- Voltage supply is below 10 Volt
  -b- There is a fault in the ABS
  The anti-locking brake system remains switched off with an ABS fault -b-, but the brake system remains fully operational.
  -c- Since the last time the vehicle was started there was a temporary speed sensor fault.
  In the case of a sensor fault -c-, the ABS warning lamp -K47- will extinguish after restarting the engine and attaining a speed of above 20 km/h (approx. 13 mph).
  -d- The connection from dash panel insert to control unit -J104- is interrupted.

=> Current flow diagrams, Electrical fault finding and Fitting locations binder

-e- Dash panel insert is defective.

satelettronica

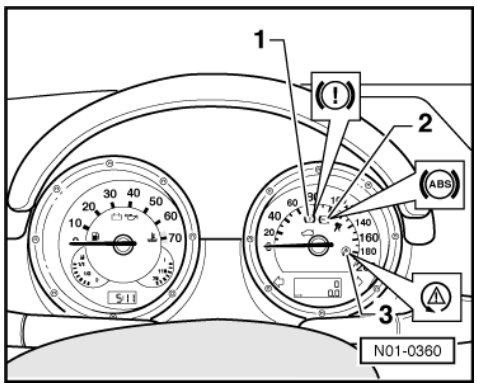

Warning lamps -K47- and -K118

- -> If the ABS warning lamp -K47- -2- goes out, but the brake system warning lamp -K118- remains on, then the fault may be:

  -a- The handbrake is applied..
  -b- There is a fault in the activation of the brake system warning lamp -K118.

=> Current flow diagrams, Electrical fault finding and Fitting locations binder

  -c- The brake fluid level is too low.

- If the ABS warning lamp -K47- -2- and the brake system warning lamp -K118- -1- light up, the ABS system is defective and the EBD (Electronic brake pressure distribution) is not functioning.

Warning! After the ABS warning lamp -K47- and brake system warning lamp -K118- have lit up it is possible that the rear wheels will lock-up earlier.

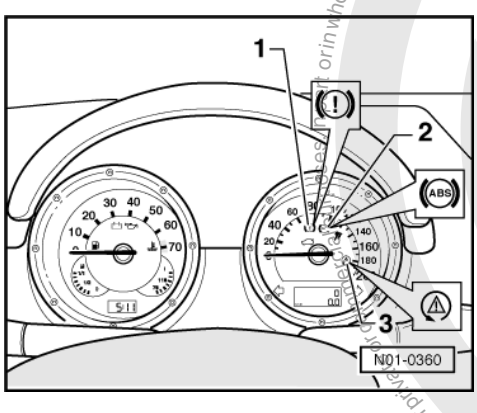

Warning lamp -K155

- -> If the stability programme warning lamp -K155- -3- does not go out after ignition is switched on and test sequence is completed then the fault may be:

  -a- Short to positive in TCS/ESP button -E256-.
  -b- There is a fault in the activation of the stability programme warning lamp -K155-.

=> Current flow diagrams, Electrical fault finding and Fitting locations binder

  -c- The TCS/ESP system has been switched off via button -E256-.
  There is a fault present which exclusively affects the safety systems of the TCS/ESP. The ABS/EDL and EBD safety systems of the vehicle remain fully functional.

satelettronica

If stability programme warning lamp -K155- flashes whilst driving the TCS or ESP system is regulating the system.

19 - Performing self diagnosis

19.1 - Performing self diagnosis

19.2 - Test prerequisites for self-diagnosis

- The tyres fitted to all wheels must be of the same (approved) size; tyres inflated to prescribed pressure.
- Mechanical/hydraulic parts of the brake system including brake light switch and brake lights OK.
- Hydraulic pipes and connections not leaking (visual check of hydraulic unit, brake calipers, wheel cylinders, tandem master brake cylinder).
- Wheel bearings and wheel bearing play OK.
- Control unit -J104- is correctly bolted to hydraulic unit -N55.
- Connector on control unit -J104- correctly plugged-in (retainer is engaged).
- Check contacts of ABS components for damage and correct seating.
- All fuses according to current flow diagram OK (remove fuse from fuse holder to check).
- Supply voltage OK (at least 10.0 V).

19.3 - Safety precautions

Observe following if test and measuring instruments are required during a test drive:

- Test and measuring instruments must be secured to rear seat and operated by a 2nd person from this location.
- When test and measuring instruments are operated from the front passenger seat there is a danger that the person sitting there could be injured in an accident when the airbag is triggered.

19.4 - Connecting fault reader V.A.G 1551 and selecting function

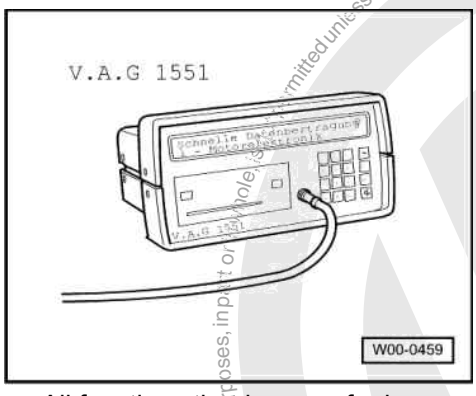

- All functions that have so far been carried out with V.A.G 1551 can now also be carried out with the tester VAS 5051.

Special tools and workshop equipment required

- V.A.G 1551 Fault reader or V.A.G 1552 vehicle system tester.
- V.A.G 1551/3 or 1551/3A Adapter cable

satelettronica
Protected by copyright. Copying for private or commercial purposes, in part or in whole, is not permitted unless authorised by Volkswagen AG. Volkswagen AG does not guarantee or accept any liability with respect to the correctness of information in this document. Copyright by Volkswagen AG.

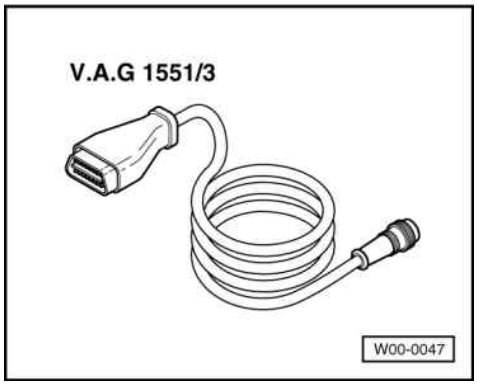

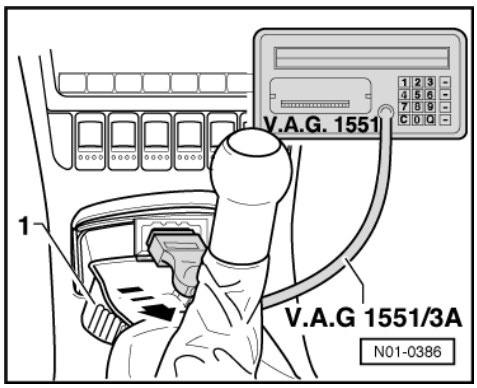

- The ABS function is switched off in the control unit during the self diagnosis.
- The fault memory can be erased after successful interrogation and repair.

- -> Pull cover -1- off in direction of arrow.
- With ignition switched off connect V.A.G 1551 using cable V.A.G 1551/3(A) to diagnostic socket.
- Connecting VAS 5051 => Page 150 .

-> Indicated on display:

```
V.A.G - SELF-DIAGNOSIS      HELP
1 - Rapid data transfer1)
2 - Flash code output1)
```

1) Is displayed alternately

If the display remains blank, check self-diagnosis connection, Electrical check, =>Page 179 , test steps 25 and 26.

- Depending on the programme, additional operating information can be printed out by pressing the HELP key of V.A.G 1551.
- The ⇒key is used for moving forward within the programme
- The PRINT key is used for switching on the printer (warning lamp in key comes on).

- Switch on ignition.
- Switch on printer with the Print key (indicator lamp in key lights up).
- Press key -1- for "Rapid data transfer" operating mode.

-> Indicated on display:

```
Rapid data transfer       HELP
Enter address word XX
```

- Press keys -0- and -3-; 03 inputs the address word of the vehicle system to be tested "Brake electronics".

-> Indicated on display:

```
Rapid data transfer       Q
03 - Brake electronics
```

Protected by copyright. Copying for private or commercial purposes, in part or in whole, is not permitted unless authorised by Volkswagen AG. Volkswagen AG does not guarantee or accept any liability with respect to the correctness of information in this document. Copyright by Volkswagen AG.
satelettronica

- Confirm input with Q key.

-> And then the display shows e.g.:

```
1C0 907 379     ESP      20     CAN
V002     □
Coding 10757     WSC XXXXX
```

Displayed is:

- The control unit identification number.

e.g. (1C0 907 379)

Allocation of control unit

=> Parts list

- System designation (ESP).
- Data BUS present. (CAN)

=> Current flow diagrams, Electrical fault finding and Fitting locations binder

- Control unit coding (10757).

Coding control unit =>Page 164

- Workshop code

=> Fault reader V.A.G 1551 operating instructions

If the control unit identification number does not appear; => Summary of functions Page 150 .

- Press ⇒ key.

-> Indicated on display (select function, e.g. 02 - Interrogate fault memory).

```
Rapid data transfer      HELP
Select function XX
```

-> Indicated on display:

```
Rapid data transfer      HELP
Control unit does not answer!
```

- By pressing the HELP key, a list of possible fault causes is printed out.
- After eliminating the possible causes of faults, enter the address word 03 for "Brake electronics" again and confirm.

If "Control unit does not answer!" again appears:

-> Indicated on display:

```
Rapid data transfer      HELP
Control unit does not answer!
```

- Perform test step 1, 2 and 3 => Page 179 , Electrical check.

-> Control unit identification influenced during interrogation (possibly influenced from external sources?)

```
Rapid data transfer
No signal from control unit!
```

- Check diagnostic wire as well as voltage supply and earth connection for ABS control unit -J104-, Electrical check, =>Page 179 .

Protected by copyright. Copying for private or commercial purposes, in part or in whole, is not permitted unless authorised by Volkswagen AG. Volkswagen AG does not guarantee or accept any liability with respect to the correctness of information in this document. Copyright by Volkswagen AG.
satelettronica

- After rectifying the possible causes of the fault, again enter the address word 03 for "Brake electronics" and confirm with Q key.

19.5 - Connecting Vehicle Diagnosis, Testing and Information System VAS 5051 and selecting ABS control unit

All functions which could previously be performed with V.A.G 1551 can also be performed with the new tester VAS 5051 in the operating mode "vehicle self-diagnosis":

=> Operating instructions for Vehicle Diagnosis, Testing and Information System VAS 5051.

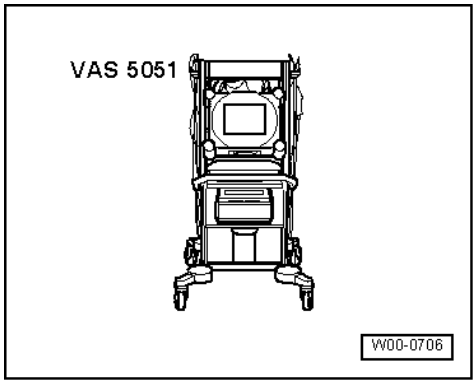

Special tools, workshop equipment, testers, measuring instruments and auxiliary items required

- VAS 5051 Vehicle Diagnosis, Testing and Information System
- The ABS function is switched off in the control unit during the self diagnosis.

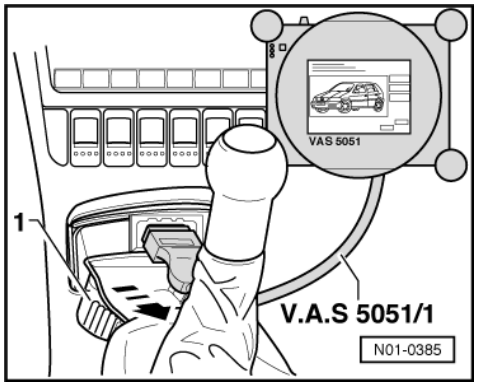

- The fault memory can be erased after successful interrogation and repair.

- -> Pull cover -1- off in direction of arrow.
- With ignition switched off, connect tester VAS 5051 to diagnosis connection using diagnosis cable VAS 5051/1 or VAS 5051/3.

- In the functions 04 - Basic setting/08 - Read data block, the display zones will be listed from top to bottom.
- If the display does not indicate as described in the work sequence:

=> Operating instructions for Vehicle Diagnosis, Testing and Information System VAS 5051.

19.6 - List of selectable functions

Page

Protected by copyright. Copying for private or commercial purposes, in part or in whole, is not permitted unless authorised by Volkswagen AG. Volkswagen AG does not guarantee or accept any liability with respect to the correctness of information in this document. Copyright by Volkswagen AG.
satelettronica

00 -	Automatic test sequence	16
01 -	Interrogate control unit version =>Connecting fault reader V.A.G 1551 and selecting functions	147
01 -	Interrogate control unit version => Connecting tester VAS 5051 and selecting functions	150
02 -	Interrogate fault memory	151
03 -	Final control diagnosis	27
04 -	Initiate basic setting	171
05 -	Erase fault memory	163
06 -	End output	163
07 -	Code control unit	164
08 -	Read measured value block	165
11 -	Login procedure	177

19.7 - Interrogating fault memory

- All functions that have so far been carried out with V.A.G 1551 can now also be carried out with the tester VAS 5051.

-> Indicated on display:

```
Rapid data transfer      HELP
Select function XX
```

- Press keys -0- and -2-; 02 enters the "Interrogate fault memory" function.

-> Indicated on display:

```
Rapid data transfer      Q
02 - Interrogate fault memory
```

- Confirm entry with Q key.

-> The number of stored faults or "No fault recognised" appears in the display.

```
X Faults recognised!
```

- Press ⇒ key.
- Press ⇒key.

  The stored faults are displayed and printed out one after the other.

- With fault information print-out, eliminate fault according to fault table, Page 152 .

  As with "No fault recognised", the programme returns to the start position after pressing the ⇒key:

-> Indicated on display:

```
Rapid data transfer      HELP
Select function XX
```

- End output (Function 06) => Page 163 .
- Switch off ignition and unplug diagnostic connectors.

Work sequence if a fault has been detected:

1. Rectify fault according to fault table, Page 152

2. Interrogate fault memory (Function 02)

Protected by copyright. Copying for private or commercial purposes, in part or in whole, is not permitted unless authorised by Volkswagen AG. Volkswagen AG does not guarantee or accept any liability with respect to the correctness of information in this document. Copyright by Volkswagen AG.
satelettronica

3. Erase fault memory (Function 05)

4. End output (Function 06)

5. Perform a test drive

6. Interrogate fault memory again

19.8 - Fault table

Notes on fault table

- When commencing fault finding of the vehicle control units, always start with function "Automatic test sequence" by pressing keys 0 and 0 because the control units are interconnected with a data bus wire. This interrogates the fault memories of the control units in the vehicle.
- All the possible faults which can be recognised by the ABS control unit -J104- and printed-out on V.A.G 1551 or VAS 5051, are listed on the following pages according to the 5 digit fault code.
- Fault code appears (in the "Rapid data transfer" mode) only on the print-out.

Example:		
Fault code	P code	Fault type code
5 digit	5 digit	3 digit
18256	P1848	035

- The 5 digit P code which may appear next to the fault code, is for use with the On-board diagnosis II and may be disregarded.
- The 3 digit fault type code is a data code and may be disregarded, but the fault type text is of use.
- Before replacing components indicated as being faulty, check all the appropriate connectors, wiring and earth connections using the current flow diagram =>Current flow diagrams, Electrical fault finding and Fitting locations binder.
- On completion of repairs always interrogate the fault memory with fault reader V.A.G 1551 or the new tester VAS 5051 and erase.
- Carry out road test exceeding 20 km/h (13 mph).
- After the road test interrogate fault memory again.

V.A.G 1551 print-out	Possible cause of fault	Rectifying fault
No fault recognised	If "No fault recognised" appears after carrying out repairs, self diagnosis is ended. If, despite "No fault recognised" appearing in the display, the ABS system does not function properly, then proceed as follows: 1. Carry out road test exceeding 20 km/h (13 mph), 2. Again interrogate fault memory, if there is still no fault stored, 3. Continue fault finding without self-diagnosis and work through the complete Electrical check => Page 179 .	

V.A.G 1551 print-out	Possible cause of fault	Rectifying fault
00283 Front left speed sensor -G47	- Open circuit; short to positive or earth, or loose contact in connections between speed sensor -G47- and control unit -J104	- Check wiring and connection using current flow diagram Perform electrical check =>from page 179
	- Damaged rotor or speed sensor -G47 - Speed sensor windings -G47- defective	- Check speed sensor -G47- and rotor for damage Renew rotor/speed sensor -G47

satelettronica

V.A.G 1551 print-out	Possible cause of fault	Rectifying fault
	- ABS control unit -J104- defective	=> Brake systems; Repair group 45; Removing and installing parts of ABS system on front and rear axles Removing and installing parts of ABS system on front and rear axles If the fault occurs again: - Renew control unit -J104 => Brake systems; Repair group 45

V.A.G 1551 print-out	Possible cause of fault	Rectifying fault
00283 Front left speed sensor -G47 Signal outside tolerances1)	- Open circuit; short to positive or earth, or loose contact in connections between speed sensor -G47- and control unit -J104 - Electrical interference from other sources (high frequency radiation e.g. non-insulated ignition cable) - Damaged rotor or speed sensor -G47 - Excessive air gap between speed sensor -G47- and rotor (signal not OK.)	- Check wiring and connection using current flow diagram Perform electrical check =>from page 179 - Read measured value block =>Page 165 Display group number 001 - Check speed sensor -G47- and rotor for damage Renew rotor/speed sensor => Brake systems; Repair group 45; Removing and installing parts of ABS system on front and rear axles Removing and installing parts of ABS system on front and rear axles

1) Type of fault, this fault is only recognised above 20 km/h (13 mph) (carry out test drive).

V.A.G 1551 print-out	Possible cause of fault	Rectifying fault
00283 Front left speed sensor -G47 Mechanical fault1)	- Excessive air gap between speed sensor -G47- and rotor (signal not OK.) - Outlet valve in hydraulic unit -N55- defective	- Check installation of speed sensor -G47- and rotor => Brake systems; Repair group 45; Removing and installing parts of ABS system or front and rear axles 27 If the fault occurs again: - Renew hydraulic unit -N55 => Brake systems; Repair group 45

1) Type of fault, this fault is only recognised above 20 km/h (13 mph) (carry out test drive).

V.A.G 1551 print-out	Possible cause of fault	Rectifying fault
00285 Front right speed sensor -G45	- Open circuit; short to positive or earth, or loose contact in connections between speed sensor -G45- and control unit -J104 - Damaged rotor or speed sensor -G45 - Speed sensor windings -G45- defective	- Check wiring and connections using current flow diagram Perform electrical check =>from page 179 - Check speed sensor -G45- and rotor for damage Renew rotor/speed sensor -G45

Protected by copyright. Copyright by Volkswagen AG. Volkswagen AG does not guarantee or accept any liability with respect to the correctness of information in this document. Copyright by Volkswagen AG. Volkswagen AG does not permitted but is authorised by Volkswagen AG, in part or in whole, is not permitted for commercial purposes.
satelettronica

V.A.G 1551 print-out	Possible cause of fault	Rectifying fault
		=> Brake systems; Repair group 45; Removing and installing parts of ABS system on front and rear axles Removing and installing parts of ABS system on front and rear axles
		If the fault occurs again:
	- ABS control unit -J104- defective	- Renew control unit -J104
		=> Brake systems; Repair group 45

V.A.G 1551 print-out	Possible cause of fault	Rectifying fault
00285 Front right speed sensor -G45 Signal outside tolerances1)	- Open circuit; short to positive or earth, or loose contact in connections between speed sensor -G45- and control unit -J104	- Check wiring and connections using current flow diagram Perform electrical check =>from page 179
	- Electrical interference from other sources (high frequency radiation e.g. non-insulated ignition cable)	- Read measured value block =>Page 165 Display group number 001
	- Damaged rotor or speed sensor -G45	
	- Excessive air gap between speed sensor -G45- and rotor (signal not OK.)	- Check speed sensor -G45- and rotor for damage Renew rotor/speed sensor
		=> Brake systems; Repair group 45; Removing and installing parts of ABS system on front and rear axles Removing and installing parts of ABS system on front and rear axles

1) Type of fault, this fault is only recognised above 20 km/h (13 mph) (carry out test drive).

V.A.G 1551 print-out	Possible cause of fault	Rectifying fault
00285 Front right speed sensor -G45 Mechanical fault1)	- Excessive air gap between speed sensor -G45- and rotor (signal not OK.)	- Check installation of speed sensor -G45- and rotor => Brake systems; Repair group 45; Removing and installing parts of ABS system or front and rear axles 27
		If the fault occurs again:
	- Outlet valve in hydraulic unit -N55- defective	- Renew hydraulic unit -N55
		=> Brake systems; Repair group 45

1) Type of fault, this fault is only recognised above 20 km/h (13 mph) (carry out test drive).

V.A.G 1551 print-out	Possible cause of fault	Rectifying fault
00287 Rear right speed sensor -G44	- Open circuit; short to positive or earth, or loose contact in connections between speed sensor -G44- and control unit -J104	- Check wiring and connections using current flow diagram Perform electrical check =>from page 179
	- Damaged rotor or speed sensor -G44 - Speed sensor windings -G44- defective	- Check speed sensor -G44- and rotor for damage Renew rotor/speed sensor -G44

satelettronica

V.A.G 1551 print-out	Possible cause of fault	Rectifying fault
		=> Brake systems; Repair group 45; Removing and installing parts of ABS system on front and rear axles Removing and installing parts of ABS system on front and rear axles If the fault occurs again:
	- ABS control unit -J104- defective	- Renew control unit -J104 => Brake systems; Repair group 45

V.A.G 1551 print-out	Possible cause of fault	Rectifying fault
00287 Rear right speed sensor -G44 Signal outside tolerances1)	- Open circuit; short to positive or earth, or loose contact in connections between speed sensor -G44- and control unit -J104	- Check wiring and connections using current flow diagram Perform electrical check =>from page 179
	- Electrical interference from other sources (high frequency radiation e.g. non-insulated ignition cable)	- Read measured value block =>Page 165 Display group number 001
	- Damaged rotor or speed sensor -G44	
	- Excessive air gap between speed sensor -G44- and rotor (signal not OK.)	- Check speed sensor -G44- and rotor for damage Renew rotor/speed sensor => Brake systems; Repair group 45; Removing and installing parts of ABS system on front and rear axles Removing and installing parts of ABS system on front and rear axles

1) Type of fault, this fault is only recognised above 20 km/h (13 mph) (carry out test drive).

V.A.G 1551 print-out	Possible cause of fault	Rectifying fault
00287 Rear right speed sensor -G44 Mechanical fault1)	- Excessive air gap between speed sensor -G44- and rotor (signal not OK.)	- Check installation of speed sensor -G44- and rotor => Brake systems; Repair group 45; Removing and installing parts of ABS system or front and rear axles 27 If the fault occurs again:
	- Outlet valve in hydraulic unit -N55- defective	- Renew hydraulic unit -N55 => Brake systems; Repair group 45

1) Type of fault, this fault is only recognised above 20 km/h (13 mph) (carry out test drive).

V.A.G 1551 print-out	Possible cause of fault	Rectifying fault
00290 Rear left speed sensor -G46	- Open circuit; short to positive or earth, or loose contact in connections between speed sensor -G46- and control unit -J104	- Check wiring and connections using current flow diagram Perform electrical check =>from page 179
	- Speed sensor windings -G46- defective - Damaged rotor or speed sensor -G46	- Check speed sensor -G46- and rotor for damage Renew rotor/speed sensor -G46

Protected by copyright. Copying for private or commercial purposes, in part or in whole, is not permitted unless authorised by Volkswagen AG. Volkswagen AG does not guarantee or accept any liability with respect to the correctness of information in this document. Copyright by Volkswagen AG.
satelettronica

V.A.G 1551 print-out	Possible cause of fault	Rectifying fault
	- ABS control unit -J104- defective	=> Brake systems; Repair group 45; Removing and installing parts of ABS system on front and rear axles Removing and installing parts of ABS system on front and rear axles If the fault occurs again: - Renew control unit -J104 => Brake systems; Repair group 45

V.A.G 1551 print-out	Possible cause of fault	Rectifying fault
00290 Rear left speed sensor -G46 Signal outside tolerances1)	- Open circuit; short to positive or earth, or loose contact in connections between speed sensor -G46- and control unit -J104 - Electrical interference from other sources (high frequency radiation e.g. non-insulated ignition cable) - Damaged rotor or speed sensor -G46 - Excessive air gap between speed sensor -G46- and rotor (signal not OK.)	- Check wiring and connections using current flow diagram Perform electrical check =>from page 179 - Read measured value block =>Page 165 Display group number 001 - Check speed sensor -G46- and rotor for damage Renew rotor/speed sensor => Brake systems; Repair group 45; Removing and installing parts of ABS system on front and rear axles Removing and installing parts of ABS system on front and rear axles

1) Type of fault, this fault is only recognised above 20 km/h (13 mph) (carry out test drive).

V.A.G 1551 print-out	Possible cause of fault	Rectifying fault
00290 Rear left speed sensor -G46 Mechanical fault1)	- Excessive air gap between speed sensor -G46- and rotor (signal not OK.) - Outlet valve in hydraulic unit -N55- defective	- Check installation of speed sensor -G46- and rotor => Brake systems; Repair group 45; Removing and installing parts of ABS system or front and rear axles 27 If the fault occurs again: - Renew hydraulic unit -N55 => Brake systems; Repair group 45

1) Type of fault, this fault is only recognised above 20 km/h (13 mph) (carry out test drive).

V.A.G 1551 print-out	Possible cause of fault	Rectifying fault
00538 Reference voltage	- Open circuit, short to positive or earth in wiring: - Yaw rate sender -G202 - Lateral acceleration sender -G200 - Brake pressure sender 1 -G201 - Brake pressure sender 2 -G214	- Check wiring and connections using current flow diagram - Perform electrical check =>from page 179
00668		

Copyright by Volkswagen AG. Volkswagen AG does not guarantee or accept any liability with respect to the correctness of information in this document. Copying for private or commercial purposes, in part or in whole, is not permitted unless authorised by Volkswagen AG.
Protected by copyright. Copyright by Volkswagen AG.
satelettronica

Protected by copyright. Copying for private or commercial purposes, in part or in whole, is not permitted unless authorised by Volkswagen AG. Volkswagen AG does not guarantee or accept any liability with respect to the correctness of information.

V.A.G 1551 print-out	Possible cause of fault	Rectifying fault
Vehicle voltage terminal 30 Signal outside tolerances	- Open circuit, short to positive or earth in the wiring	- Check wiring and connections using current flow diagram - Perform electrical check =>from page 179

V.A.G 1551 print-out	Possible cause of fault	Rectifying fault
00778 Steering angle sender -G85 No communication1)	- Open circuit or loose contact in data bus wiring between steering angle sender -G85- and control unit -J104 - Check specification from steering angle sender -G85 - Steering angle sender -G85- defective	- Check wiring and connections using current flow diagram - Perform electrical check =>from page 179 - Read measured value block =>Page 165 Display group number 004 Renew steering angle sender -G85 => Brake systems; Repair group 45 - Perform a zero compensation: - Introduce basic settings =>Page 171 Display group number 60

1) The data transfer between control unit -J104- and steering angle -G85- is performed via a data bus.

V.A.G 1551 print-out	Possible cause of fault	Rectifying fault
00778 Steering angle sender -G851) Not fitted or incorrectly adjusted	- Steering angle sender -G85- sends no or incorrect setting values	- Perform a zero compensation: Introduce basic settings =>Page 171 Display group number 60
00778 Steering angle sender -G851) Mechanical fault	- Installation of steering angle sender -G85- is not OK. - Running gear/steering geometry is not OK. - Steering wheel has been removed and no subsequent zero compensation performed	- Check installation of steering angle sender -G85 => Brake systems; Repair group 45 - Perform vehicle alignment checks => Running gear, Axles, steering; Repair group 44; Vehicle alignment check Vehicle alignment check Perform a zero compensation: - Introduce basic settings =>Page 171 Display group number 60

1) The data transfer between control unit -J104- and steering angle -G85- is performed via a data bus.

V.A.G 1551 print-out	Possible cause of fault	Rectifying fault
00778 Steering angle sender -G85 Implausible signal1)	- Installation of steering angle sender -G85- is not OK. - Running gear/steering geometry is not OK. - Unacceptable vibrations in steering due to wear	- Check installation of steering angle sender -G85 => Brake systems; Repair group 45 - Perform vehicle alignment checks => Running gear, Axles, steering; Repair group 44; Vehicle alignment check Vehicle alignment check Perform a zero compensation:

satelettronica

V.A.G 1551 print-out	Possible cause of fault	Rectifying fault
		- Introduce basic settings =>Page 171 Display group number 60

1) The data transfer between control unit -J104- and steering angle -G85- is performed via a data bus.

V.A.G 1551 print-out	Possible cause of fault	Rectifying fault
00778 Steering angle sender -G85 Defective1)	- Steering angle sender -G85- defective	Renew steering angle sender -G85 => Brake systems; Repair group 45 - Perform a zero compensation: - Introduce basic settings =>Page 171 Display group number 60

1) The data transfer between control unit -J104- and steering angle -G85- is performed via a data bus.

V.A.G 1551 print-out	Possible cause of fault	Rectifying fault
00810 Brake pressure senders 1/2 Implausible signal Brake pressure sender 1 -G201 Brake pressure sender 2 -G214	- Open circuit in earth connection to brake pressure sender 1 or 2 - Short circuit in signal wire to brake pressure sender 1 -G201- or brake pressure sender 2 -G214	- Check wiring and connections using current flow diagram Perform electrical checks =>from page 179 - Read measured value block =>Page 165 Display group number 005
	- Brake pressure sender 1 -G201- or sender 2 -G214- defective	- Renew brake pressure sender 1 -G201- or sender 2 -G214 => Brake systems; Repair group 47; Vehicles with ABS/EDL/TCS/ESP Vehicles with ABS/EDL/TCS/ESP - Perform a zero compensation: - Introduce basic settings =>Page 171 Display group number 66
	- Hydraulic circuit is not functioning	- Check brake system => Brake systems; Repair group 45

V.A.G 1551 print-out	Possible cause of fault	Rectifying fault
00812 Brake pressure solenoid trip switch -F84	- Open circuit; short to positive or earth, or loose contact in connections:	- Check wiring and connections using current flow diagram - Perform electrical check =>from page 179
	- Check brake pressure solenoid trip switch -F84	- Read measured value block =>Page 165 Display group number 003 - Introduce basic settings =>Page 171 Display group number 31 If the fault occurs again:
	- Brake pressure servo defective	- Renew brake pressure servo => Brake systems; Repair group 47; Vehicles with ABS/EDL/TCS/ESP Vehicles with ABS/EDL/TCS/ESP

satelettronica
Protected by copyright. Copying for private or commercial purposes, in part or in whole, is not permitted unless authorised by Volkswagen AG. Volkswagen AG does not guarantee or accept any liability with respect to the correctness of information. Copyright by Volkswagen AG.

V.A.G 1551 print-out	Possible cause of fault	Rectifying fault
00813 Brake pressure sender 2 -G214 Electrical fault in current circuit	- Open circuit; short to positive or earth, or loose contact in connections: - Brake pressure sender 2 -G214- defective	- Check wiring and connections using current flow diagram - Perform electrical check =>from page 179 - Read measured value block =>Page 165 Display group number 005 Renew brake pressure sender 2 -G214 => Brake systems; Repair group 47; Vehicles with ABS/EDL/TCS/ESP Vehicles with ABS/EDL/TCS/ESP - Perform a zero compensation: - Introduce basic settings =>Page 171 Display group number 66

V.A.G 1551 print-out	Possible cause of fault	Rectifying fault
00814 Brake pressure solenoid -N247	- Open circuit; short to positive or earth, or loose contact in connections: - Brake pressure servo defective - Control unit -J104- output stage defective	- Check wiring and connections using current flow diagram Perform electrical checks =>from page 179 - Introduce basic settings =>Page 171 Display group number 31 - Renew brake pressure servo => Brake systems; Repair group 47; Vehicles with ABS/EDL/TCS/ESP Vehicles with ABS/EDL/TCS/ESP If the fault occurs again: - Check coding for control unit -J104- =>Page 164 - Perform a zero compensation: - Introduce basic settings =>Page 171 Display group numbers 60,63 and 66
Continued on next page:		

V.A.G 1551 print-out	Possible cause of fault	Rectifying fault
00814 Brake pressure solenoid -N247 Continuation:	- ABS control unit -J104- defective	- Renew control unit -J104 => Brake systems; Repair group 45
01044 Control unit incorrectly coded	- Control unit -J104- incorrectly coded - Coding bridge in multi-pin connector to control unit -J104- open or short circuit	- Check coding for control unit -J104- =>Page 164 - Check wiring and connections using current flow diagram => Current flow diagrams, Electrical fault finding and Fitting locations binder

satelettronica
Volkswagen AG, Wolfsburg (Germany) has the copyright to this document. Reproduction, in part or in whole, is not permitted unless authorised by Volkswagen AG. Volkswagen AG does not guarantee or accept any liability with respect to the correctness of information in this document. Copying for private or commercial purposes, in part or in whole, is not permitted unless authorised by Volkswagen AG. Protected by copyright.

V.A.G 1551 print-out	Possible cause of fault	Rectifying fault
01130 ABS operation Implausible signal1)	- Electrical interference from other sources (high frequency radiation e.g. non-insulated ignition cable) - Open circuit, short to positive or earth in the wiring - ABS control unit -J104- defective	- Erase fault memory Perform test drive at more than 20 km/h (13 mph) Interrogate fault memory again - Check wiring and connections using current flow diagram - Perform electrical check =>from page 179 If the fault occurs again: - Renew control unit -J104 => Brake systems; Repair group 45

1) Type of fault, this fault is only recognised above 20 km/h (13 mph) (carry out test drive).

V.A.G 1551 print-out	Possible cause of fault	Rectifying fault
01276 ABS hydraulic pump -V64 Signal outside tolerances1)	- Open circuit; short to positive or earth, or loose contact in connections: - Internal connection hydraulic pump -V64-to control unit - Hydraulic pump -V64- defective - ABS control unit -J104- defective - Hydraulic pump -V64- defective	- Check wiring and connections using current flow diagram - Perform electrical check =>from page 179 - Perform a functional check: Perform final control diagnosis => Page 27 - If the hydraulic pump -V64- does not run in the final control diagnosis, exchange the control unit -J104- - Renew control unit -J104 If the fault occurs again: - Renew hydraulic unit -N55 => Brake systems; Repair group 45

1) Type of fault, this fault is only recognised above 20 km/h (13 mph) (carry out test drive).

V.A.G 1551 print-out	Possible cause of fault	Rectifying fault
01312 Data bus drive defective1)	- Open circuit, short to positive or earth in data bus wiring	- Read measured value block =>Page 165 Display group number 125 - Check wiring and connections of data bus wiring using current flow diagram - Perform electrical check =>from page 179

1) This fault occurs only together with fault: Steering angle sender -G85-, No communication.

V.A.G 1551 print-out	Possible cause of fault	Rectifying fault
01314 Engine control unit No communication		- Read measured value block =>Page 165 Display group number 125

satelettronica

V.A.G 1551 print-out	Possible cause of fault	Rectifying fault
	- Open circuit, short to positive or earth in data bus wiring	- Check wiring and connections of data bus wiring using current flow diagram
or:		- Perform electrical check =>from page 179
Interrogate engine control unit memory	- Fault entry in engine control unit	- Interrogate engine control unit fault memory => Repair group 01 for relevant engine codes

V.A.G 1551 print-out	Possible cause of fault	Rectifying fault
01315 Gearbox control unit1) No communication	- Open circuit, short to positive or earth in data bus wiring	- Read measured value block =>Page 165 Display group number 125 - Check wiring and connections of data bus wiring using current flow diagram - Perform electrical check =>from page 179
01316 Brake control unit No communication	- Open circuit, short circuit to positive or earth in data bus wiring	- Check data bus wiring and connection using current flow diagram - Perform electrical check =>from page 179

1) Vehicles with automatic gearbox only.

V.A.G 1551 print-out	Possible cause of fault	Rectifying fault
01423 Lateral acceleration sensor -G200 Electrical fault in current circuit	- Open circuit, short to positive or earth in the wiring - Installation of lateral acceleration sender -G200- is not OK. - Lateral acceleration sender -G200- defective	- Read measured value block =>Page 165 Display group number 004 - Check wiring and connections using current flow diagram - Perform electrical check =>from page 179 - Check installation of lateral acceleration sender -G200 - Renew lateral acceleration sender -G200 => Brake systems; Repair group 45 - Perform a zero compensation: - Introduce basic settings =>Page 171 Display group number 63

V.A.G 1551 print-out	Possible cause of fault	Rectifying fault
01423 Lateral acceleration sensor -G200 Implausible signal	- Installation of lateral acceleration sender -G200- is not OK. - Lateral acceleration sender -G200- defective	- Read measured value block =>Page 165 Display group number 004 - Check installation of lateral acceleration sender -G200 - Renew lateral acceleration sender -G200 => Brake systems; Repair group 45

Protected by copyright. Copying for private or commercial purposes, in part or in whole, is not permitted unless authorised by Volkswagen AG. Volkswagen AG does not guarantee or accept any liability with respect to the correctness of information in this document. Copyright by Volkswagen AG.
satelettronica

V.A.G 1551 print-out	Possible cause of fault	Rectifying fault
		- Perform a zero compensation: - Introduce basic settings =>Page 171 Display group number 63

V.A.G 1551 print-out	Possible cause of fault	Rectifying fault
01434 Brake light suppression relay (ESP) -J508 Electrical fault in current circuit	- Open circuit, short to positive or earth in the wiring - Relay for deactivating brake lights -J508- defective	- Check wiring and connections using current flow diagram - Perform electrical check =>from page 179 - Renew relay for deactivating brake lights -J508 => Current flow diagrams, Electrical fault finding and Fitting locations binder

V.A.G 1551 print-out	Possible cause of fault	Rectifying fault
01435 Brake pressure sender 1 -G201 Electrical fault in current circuit	- Open circuit; short to positive or earth, or loose contact in connections: - Brake pressure sender 1 -G201- defective	- Check wiring and connections using current flow diagram - Perform electrical check =>from page 179 - Read measured value block =>Page 165 Display group number 005 Renew brake pressure sender 1 -G201 => Brake systems; Repair group 47; Vehicles with ABS/EDL/TCS/ESP Vehicles with ABS/EDL/TCS/ESP - Perform a zero compensation: - Introduce basic settings =>Page 171 Display group number 66

V.A.G 1551 print-out	Possible cause of fault	Rectifying fault
01542 Yaw rate sender -G202 Implausible signal	- Open circuit, short to positive or earth in the wiring - Installation of yaw rate sender -G202- is not OK. - Yaw rate sender -G202- defective	- Read measured value block =>Page 165 Display group number 004 - Check wiring and connections using current flow diagram - Perform electrical check =>from page 179 - Check installation of yaw rate sender -G202 => Brake systems; Repair group 45 - Renew yaw rate sender -G202 => Brake systems; Repair group 45

V.A.G 1551 print-out	Possible cause of fault	Rectifying fault
01542		

Protected by copyright. Copying for private or commercial purposes, in part or in whole, is not permitted unless authorised by Volkswagen AG. Volkswagen AG does not guarantee or accept any liability with respect to the correctness of information in this document. Copyright by Volkswagen AG.
satelettronica

V.A.G 1551 print-out	Possible cause of fault	Rectifying fault
Yaw rate sender -G202 Electrical fault in current circuit	- Open circuit, short to positive or earth in the wiring - Yaw rate sender -G202- defective	- Read measured value block =>Page 165 Display group number 004 - Check wiring and connections using current flow diagram - Perform electrical check =>from page 179 - Renew yaw rate sender -G202 => Brake systems; Repair group 45

V.A.G 1551 print-out	Possible cause of fault	Rectifying fault
18256 Interrogate engine control unit memory	- Fault entry in engine control unit	- Interrogate engine control unit fault memory => Repair group 01 for relevant engine codes
65535 Control unit defective	ABS control unit -J104- defective	- Renew control unit -J104 => Brake systems; Repair group 45

19.9 - Erasing fault memory, ending output

- All functions that have so far been carried out with V.A.G 1551 can now also be carried out with the tester VAS 5051.

Prerequisites:

- Fault memory interrogated => Page 151 .

1. Erasing fault memory

- Press ⇒ key.

-> Indicated on display:

```
Rapid data transfer      HELP
Select function XX
```

- Press keys -0- and -5-; 05 enters the "Erase fault memory" function.

-> Indicated on display:

```
Rapid data transfer      Q
05 Erase fault memory
```

- Confirm entry with Q key

-> Indicated on display:

```
Rapid data transfer
Fault memory is erased!
```

- Press ⇒ key.

-> Indicated on display:

```
Rapid data transfer      HELP
Select function XX
```

-> Indicated on display:

Protected by copyright. Copying for private or commercial purposes, in part or in whole, is not permitted unless authorised by Volkswagen AG. Volkswagen AG does not guarantee or accept any liability with respect to the correctness of information in this document. Copyright by Volkswagen AG.
satelettronica

```
Warning!
Fault memory was not interrogated.
```

- Adhere exactly to test sequence: First interrogate fault memory, then erase

2. Ending output

- Press keys -0- and -6-, this ends the output.

-> Indicated on display

```
Rapid data transfer      Q
06 - End output
```

- Confirm input with Q key.

-> Indicated on display:

```
Rapid data transfer     HELP
Select function XX
```

- Switch off ignition.
- Disconnect connection to fault reader V.A.G 1551.
- Switch on ignition.

ABS warning lamp -K47- must go out after approx. 2 seconds.

19.10 - Coding control unit

- All functions that have so far been carried out with V.A.G 1551 can now also be carried out with the tester VAS 5051.
- Warning lamps for ABS -K47- and for brake system -K118- flash when control unit is coded with 00000. An entry is not made in the fault memory.
- The control unit -J104- must be recoded if the vehicle relevant coding is not displayed or the control unit has been renewed.

Coding is only possible after the workshop code (WSC) has been entered into V.A.G 1551.

Work sequence

- Connect fault reader V.A.G 1551 and select brake electronics control unit with ignition switched on (address word 03); => Page 147 .
- Establish engine code.

-> Indicated on display:

```
Rapid data transfer     HELP
Select function XX
```

- Input 07 for the function "Code control unit" and confirm with Q.

-> Indicated on display:

```
Rapid data transfer     Q
07 - Code control unit
```

- Confirm input with Q key.

-> Indicated on display:

```
Coding control unit     Q
Enter code number XXXXX     (0-32000)
```

- Enter the relevant code number for this vehicle and confirm with Q key.

Protected by copyright. Copying for private or commercial purposes, in part or in whole, is not permitted unless authorised by Volkswagen AG. Volkswagen AG does not guarantee or accept any liability with respect to the correctness of information in this document. Copyright by Volkswagen AG.
satelettronica

Coding variations => Page 165 .

-> On the display the control unit identification and coding are displayed, e.g.:

```
1C0 907 379     ESP     20     CAN
V002     □
Coding 10757     WSC 00000
```

Coding table for ABS/EDL/TCS/ESP

With control unit identification number 1C0 907 379

Engine	Engine code	Veh. version	Code number
All	All	Front wheel drive	10757

19.11 - Read measured value block

- All functions that have so far been carried out with V.A.G 1551 can now also be carried out with the tester VAS 5051.

The control unit can transfer a considerable amount of test data. This test data delivers information on the operational condition of the system and/or sensors connected to it. In many cases the transferred test data supports fault finding and fault rectification. The test data has been summarized into single display groups because all the information cannot be evaluated at the same time. The information can be selected via display group numbers.

Safety measures

Note!
-
-
-

- Connect fault reader V.A.G 1551 and select brake electronics control unit with ignition switched on (address word 03); => Page 147 .

-> Indicated on display:

```
Rapid data transfer      HELP
Select function XX
```

- Press keys 0 and 8. (The function "Read measured value block" is initiated with 08.)

-> Indicated on display:

```
Rapid data transfer      Q
08 - Read measured value block
```

- Confirm entry with key Q.

-> Indicated on display:

```
Read measured value block
Enter display group number XXX
```

- Enter display group number => List of selectable display group numbers, Page 166 .

Protected by copyright. Copyright by Volkswagen AG. Volkswagen AG does not guarantee or accept any liability with respect to the correctness of information in this document. Copyright by Volkswagen AG, unless authorised by Volkswagen AG, is not permitted for commercial purposes, in part or whole, is not permitted for private or commercial purposes, in part or whole, is not permitted unless authorised by Volkswagen AG.
satelettronica

List of selectable display group numbers

Display group number	Display zone	Designation
001	1	Wheel speed at front left wheel sensor (km/h)
	2	Wheel speed at front right wheel sensor (km/h)
	3	Wheel speed at rear left speed sensor (km/h)
	4	Wheel speed at rear right speed sensor (km/h)
002	1	Wheel speed at front left speed sensor (km/h)
	2	Wheel speed at front right wheel sensor (km/h)
	3	Wheel speed at rear left speed sensor (km/h)
	4	Wheel speed at rear right speed sensor (km/h)
003	1	Brake light switch
	2	Brake pressure solenoid trip switch
	3	Vacant
	4	Vacant

Display group number	Display zone	Designation
004	1	Steering angle sender
	2	Lateral accelerator sender
	3	Yaw rate sender
	4	Vacant
005	1	Brake pressure sender
	2	Brake pressure sender
	3	Vacant
	4	Vacant
125	1	Data bus for engine
	2	Data bus for steering angle
	3	Data bus for gearbox1)
	4	Vacant

1) Vehicles with automatic gearbox only.

Test sequence and test tables with measured values

Checking speed sensor allocation

Display group number 001

- Press keys 0, 0 and 1.
- Confirm entry with key Q.

```
Read measured value block          1
□ 1   □     2     3     □ 4
```

-> There are always 4 display zones -arrows- in the measured value block. Decoding the individual values in display zones 1 to 4 can be read-off from the following tables.

-> Indicated on display: (vehicle stationary)

```
Read measured value block     1     "
0 km/h     0 km/h     0 km/h     0 km/h
```

Press C key for the next display group number entry.

Protected by copyright. Copying for private or commercial purposes, in part or in whole, is not permitted unless authorised by Volkswagen AG. Volkswagen AG does not guarantee or assume liability with respect to the correctness of information in this document. Copyright by Volkswagen AG.

satelettronica

If the ⇒key is pressed, keys 0 and 8 for work sequence "Read measured value block" must be pressed again afterwards to regain entry.

For display group number 001 remember:

The actual wheel speeds are displayed. They serve to check the speed sensor allocation to the wheel. (The vehicle must be raised and the wheel must be rotated by hand by a 2nd mechanic).

Read measured value block			1 ⇒	Display group number: 001
0 km/h	4 km/h	0 km/h	0 km/h	◂ Indicated on display: (Example)
				Wheel speed at rear right speed sensor - (0...255 km/h)
				Wheel speed at rear left speed sensor - (0...255 km/h)
				Wheel speed at front right speed sensor - (0...255 km/h)
				Wheel speed at front left speed sensor - (0...255 km/h)

Checking speed sensor

Display group number 002

- Press keys 0, 0 and 2.
- Confirm entry with key Q.

```
Read measured value block          2
□ 1     □      2      3      □ 4
```

-> There are always 4 display zones -arrows- in the measured value block. Decoding the individual values in display zones 1 to 4 can be read-off from the following tables.

-> Indicated on display: (vehicle stationary)

```
Read measured value block      2
255 km/h     255 km/h     255 km/h     255
km/h
```

Press C key for the next display group number entry.

If the ⇒key is pressed, keys 0 and 8 for work sequence "Read measured value block" must be pressed again afterwards to regain entry.

For display group number 002 remember:

The reading of measured value blocks in display group number 002 must be undertaken when driving off slowly. Then the control unit -J104- will store the first usable voltage signals provided by the speed sensors and display these as a fixed value in the measured value block.

Read measured value block			2 ⇒	Display group number: 002
3 km/h1)	6 km/h1)	2 km/h2)	1 km/h2)	◂ Indicated on display: (when driving off slowly)
				Wheel speed at rear right speed sensor - (0...255 km/h)
				Wheel speed at rear left speed sensor - (0...255 km/h)
				Wheel speed at front right speed sensor - (0...255 km/h)

Copyright by Volkswagen AG. Volkswagen AG does not guarantee or accept any liability with respect to the correctness of information in this document. Copying for private or commercial purposes, in part or in whole, is not permitted unless authorised by Volkswagen AG. Copyright. Copyright protected.
satelettronica

Wheel speed at front left speed sensor - (0...255 km/h)

1) If the deviations in display zones 1 and 2 are greater than 6 km/h (approx. 3.75 mph), the following faults may be present:

2) If the deviations in display zones 3 and 4 are greater than 2 km/h (approx. 1.25 mph), the following faults may be present:

- Air gap between speed sensor and rotor may be too big.

- Check that speed sensor is screwed correctly to wheel bearing housing.

- Speed sensor or rotor exterior damaged.

- Change damaged component.

Checking brake light switch and brake pressure solenoid trip switch

Display group number 003

- Press keys 0, 0 and 3
- Confirm entry with key Q.

```
Read measured value block          3
□ 1    □      2      3      □ 4
```

-> There are always 4 display zones -arrows- in the measured value block. Decoding the individual values in display zones 1 to 4 can be read-off from the following tables.

-> Indicated on display: (vehicle stationary)

```
Read measured value block     3
not oper.     not oper.
```

Press C key for the next display group number entry.

If the ⇒key is pressed, keys 0 and 8 for work sequence "Read measured value block" must be pressed again afterwards to regain entry.

Read measured value block 3 ⇒	Display group number: 003
not oper. not oper.	◂ Indicated on display
	Vacant
Vacant Brake pressure solenoid trip switch - not oper. ⇒Brake pedal not depressed - operated ⇒Brake pedal depressed Brake light switch: - not oper. ⇒Brake pedal not depressed - oper. ⇒Brake pedal depressed If despite depressed foot brake -not oper.- or despite not depressed foot brake -oper.- is displayed on the V.A.G 1551 display, perform test step No. 4 of Electrical check, Page 119 . There is also a possibility that the brake light switch has not been correctly adjusted. => Brake system; Repair group 46; Brake pedal - Assembly overview; Adjusting brake light switch; Brake pedal - Assembly overview; Adjusting brake light switch	

Checking steering angle sender, lateral accelerator sender and yaw rate sender

Display group number 004

- Press keys 0, 0 and 4
- Confirm entry with key Q.

```
Read measured value block     4
□ 1    □ 2     3
```

Protected by copyright. Copying for private or commercial purposes, in any form, is not permitted unless authorised by Volkswagen AG. Volkswagen AG does not guarantee or accept any liability with respect to the correctness of information in this document. Copyright by Volkswagen AG.
satelettronica

-> There are always 3 display zones -arrows- in the measured value block. Decoding the individual values in display zones 1 to 3 can be read-off from the following tables.

-> Indicated on display: e.g. (vehicle stationary)

```
Read measured value block      4
0.05      0.0m/s2-      1.265/s
```

Press C key for the next display group number entry.

If the ⇒key is pressed, keys 0 and 8 for work sequence "Read measured value block" must be pressed again afterwards to regain entry.

Read measured value block			4 ⇒	**Display group number: 004**
0.0°	0.0m/s2-	1.26°/s		◂ Indicated on display (example)
				Vacant
				Yaw rate sender: - Specification when vehicle is stationary:± 2.5°/s - Perform electrical checks from => Page 179
				Lateral acceleration sensor: - Specification when vehicle stationary:± 0.5m/s2 - Specification at full lock at a speed of 20 km/h (13 mph) in a left-hand corner: The values increase steadily. - Specification at full lock at a speed of 20 km/h (13 mph) in a right-hand corner: The values increase steadily with a negative (-) prefix. - Check lateral acceleration sensor -G200- =>Page 179
				Steering angle sender: - If the steering angle sender -G85 is tested when driving straight-ahead, then zero compensation must also be performed.1) - Specification at straight ahead ±4.5° - Perform electrical checks from => Page 171 Display group number 60

1)When performing a test drive where the fault reader V.A.G 1551 or tester VAS 5051 is connected and in Diagnosis or Read measured value block there is no ABS or ESP regulation. The ABS or ESP warning lamps do not light up. The self-diagnosis of control unit -J104- is terminated when exceeding a speed of 20 km/h (13 mph).

Checking lateral acceleration sensor -G200

- Remove lateral acceleration sensor -G200. When doing this, do not pull connector off lateral acceleration sensor -G200.

=> Brake systems; Repair group 45

◆ All functions that have so far been carried out with V.A.G 1551 can now also be carried out with the tester VAS 5051.

- Connect fault reader V.A.G. 1551.

The lateral acceleration sensor -G200- can be checked with the aid of function "Read measured value block", display group 005.

```
Read measured value block      4
□ 1     □ 2      3
```

-> There are always 3 display zones -arrows-. Display zone 2 displays the value for the lateral acceleration sensor -G200.

-> Indicated on display: e.g. (vehicle stationary)

Protected by copyright. Copying for private or commercial purposes, in part or in whole, is not permitted unless authorised by Volkswagen AG. Volkswagen AG does not guarantee or accept any liability with respect to the correctness of information in this document. Copyright by Volkswagen AG.
satelettronica

```
Read measured value block      4
0.05      0.0m/s2-      1.265/s
```

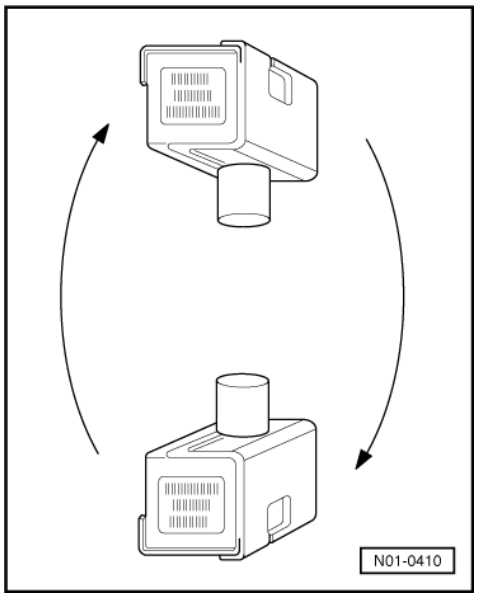

- -> Turn 90° to right of installation position (see illustration).
- Display in display zone 2 (with vehicle stationary) e.g. -9.8 ±1 m/s2.

A positive result equates to the forces during a left turn.

- -> Turn 90° to left of installation position (see illustration).
- Display in display zone 2 (with vehicle stationary) e.g. 9.8 ±1 m/s2.

A negative result equates to the forces during a right turn.

Checking brake pressure sender

Display group number 005

- Press keys 0, 0 and 5
- Confirm entry with key Q.

```
Read measured value block      5
□ 1     □ 2      3      □ 4
```

-> There are always 4 display zones -arrows- in the measured value block. Decoding the individual values in display zones 1 to 4 can be read-off from the following tables.

-> Indicated on display: e.g. (vehicle stationary)

```
Read measured value block      5
- 1.06 bar      - 1.48 bar
```

Press C key for the next display group number entry.

If the ⇒key is pressed, keys 0 and 8 for work sequence "Read measured value block" must be pressed again afterwards to regain entry.

Read measured value block 5 ⇒ -1.06 bar -1.48 bar	**Display group number: 005** ◂ Indicated on display (example)
Vacant **Vacant** Brake pressure sender - Specification when brake pedal is not depressed: ± 7 bar - Perform electrical check from => Page 179	

Protected by copyright. Copying for private or commercial purposes, in part or in whole, is not permitted unless authorised by Volkswagen AG. Volkswagen AG does not guarantee or accept any liability with respect to the correctness of information in this document. Copyright by Volkswagen AG.
satelettronica

Brake pressure sender - Specification when brake pedal is not depressed: ± 7 bar - Perform electrical check from => Page 179

Checking data bus wiring

Display group number 125

- Press keys 1, 2 and 5
- Confirm entry with key Q

```
Read measured value block          125
□ 1     □      2      3      □ 4
```

-> There are always 4 display zones -arrows- in the measured value block. Decoding the individual values in display zones 1 to 4 can be read-off from the following tables.

-> Indicated on display: (vehicle stationary)

```
Read measured value block     125
Engine 1      St.ang. 1
```

Press C key for the next display group number entry.

If the ⇒key is pressed, keys 0 and 8 for work sequence "Read measured value block" must be pressed again afterwards to regain entry.

Read measured value block			125 ⇒	Display group number: 125
Engine 1	St.ang. 1	Gear. 1		◂ Indicated on display (example)
				Vacant
				Data bus for gearbox1) - 1 ⇒Data bus connection is available. - 0 ⇒Data bus connection is not available.2)
				Data bus for steering angle - 1 ⇒Data bus connection is available. - 0 ⇒Data bus connection is not available.2)
				Data bus for engine - 1 ⇒Data bus connected - 0 ⇒Data bus not connected.2)

1) Vehicles with automatic gearbox only.

- Incorrect gearbox control unit or incorrect gearbox control unit coding.
- Gearbox control unit defective.

=> Repair group 01 for relevant gearbox code.

2) Data bus connection interrupted (open circuit) or data bus wiring interchanged.

=> Current flow diagrams, Electrical fault finding and Fitting locations binder.

19.12 - Initiating basic setting

Function 04 "Introduce basic settings" performs several functions with ESP:

- Display group 001 is required to bleed the hydraulic system => Page 76
- In display group number 031, a functional check of brake pressure solenoid trip switch -F84- and brake pressure solenoid -N247- is performed => Page 172
- Display group 060 is required to perform a zero compensation for steering angle sender -G85- => Page 173

Copyright by Volkswagen AG. Volkswagen AG does not guarantee or accept any liability with respect to the correctness of information in this document. Copyright by Volkswagen AG. Protected by copyright. Copying for private or commercial purposes, in part or in whole, is not permitted unless authorised by Volkswagen AG.
satelettronica

- Display group number 063 is required to perform a zero compensation for lateral acceleration sensor -G200- => Page 175
- Display group 066 is required to perform a zero compensation for brake pressure sender 1 -G201- and brake pressure sender 2 -G214- => Page 176

When the control unit -J104- is changed, a zero compensation must be performed for the following components:

- Lateral acceleration sensor -G200.
- Steering angle sender -G85.
- Brake pressure sender 1 -G201.
- Brake pressure sender 2 -G214.

When the individual sensors or senders are changed, a zero compensation must only be carried out for the changed component.

Display group number 31: Checking brake pressure solenoid -N247- and brake pressure solenoid trip switch -F84.

- All functions that have so far been carried out with V.A.G 1551 can now also be carried out with the tester VAS 5051.

- Connect fault reader V.A.G 1551 and select (address word 03) "Brake electronics control unit" with ignition switched on => Page 150 .

-> Indicated on display:

```
Rapid data transfer      HELP
Enter address word XX
```

- Start engine.
- Press keys 0 and 4. (The function "Initiating basic setting" is selected with 04).

-> Indicated on display:

```
Rapid data transfer      Q
04 - Basic setting
```

- Confirm entry with key Q.

-> Indicated on display:

```
Basic setting     HELP
Enter display group number XXX
```

- Press keys 0, 3 and 1
- Confirm entry with key Q.
- ABS warning lamp flashes.

-> Indicated on display:

```
System in basic setting     31
Magnetic coil     active
```

- Press key 3

-> And then the display shows e.g.:

```
System in basic setting     32
9.13bar     7.43bar     not. oper.
```

- Brake pedal not depressed.
- Press key 3

-> Indicated on display:

```
System in basic setting     33
Depress pedal and hold...
```

- Operate brake pedal.

Protected by copyright. Copying for private or commercial purposes, in part or in whole, is not permitted unless authorised by Volkswagen AG. Volkswagen AG does not guarantee or accept any liability with respect to the correctness of information in this document. Copyright by Volkswagen AG.
satelettronica

Brake lights light up.

Brake lights do not light up:

- Brake light relay defective

=> Current flow diagrams, Electrical fault finding and Fitting locations

- Brake pressure solenoid trip switch -F84- defective.
- Perform electrical checks from => Page 179 .

- Press key 3

-> And then the display shows e.g.:

```
System in basic setting      34
86.27bar     83.48bar     oper.
```

- Operate brake pedal.
- Press key 3

-> Indicated on display:

```
System in basic setting      35
Pedal      release
```

- Remove foot from brake pedal.
- Press key 3

-> And then the display shows e.g.:

```
System in basic setting      36
- 0.85bar     - 1.91bar     not oper.
```

- Press key 3

-> Indicated on display:

```
System in basic setting      37
Solenoid valve test complete
```

- Press ⇒ key.

-> Indicated on display:

```
Rapid data transfer       HELP
Enter address word XX
```

- Press keys 0 and 6, this ends the output.

-> Indicated on display

```
Rapid data transfer       Q
06 - End output
```

Display group 60: Zero compensation of steering angle sender -G85

- All functions that have so far been carried out with V.A.G 1551 can now also be carried out with the tester VAS 5051.

- Connect fault reader V.A.G 1551 and select (address word 03) "Brake electronics control unit" with ignition switched on => Page 150 .
- Start engine.
- Carry out a short test drive over a flat and level surface. Drive straight-ahead and not faster then 20 km/h (12.5 mph) and observe the following points:

- If the steering wheel is not in the centralized position when driving straight ahead then the steering must be corrected within the framework of an alignment check.

Protected by copyright. Copying for private or commercial purposes, in part or in whole, is not permitted unless authorised by Volkswagen AG. Volkswagen AG does not guarantee or accept any liability with respect to the correctness of information in this document. Copyright by Volkswagen AG.
satelettronica

=> Running gear, Axles, Steering, Front and four-wheel drive; Repair group 44; Vehicle alignment Vehicle alignment

- If the steering wheel is in the straight ahead position during the test drive, stop the vehicle whilst still driving straight ahead.
- Check the zero position with help of "Read measured value block" =>Page 165 , Display group number 004.

Ensure steering wheel is not moved. Do not switch off ignition!

- Perform function 11 "Login procedure" successfully first using Fault reader V.A.G 1551 => Page 177

-> Indicated on display:

```
Rapid data transfer        HELP
Enter address word XX
```

- Press keys 0 and 4. (The function "Initiating basic setting" is selected with 04).

-> Indicated on display:

```
Rapid data transfer        Q
04 - Basic setting
```

- Confirm entry with key Q.

-> Indicated on display:

```
Basic setting      HELP
Enter display group number XXX
```

- Press keys 0, 6 and 0
- Confirm entry with key Q.
- ABS warning lamp flashes.

-> And then the display shows e.g.:

```
System in basic setting      60
Compens. OK.      0.05
```

-> If this display appears the login procedure has not been performed successfully.

```
Function is unknown or cannot be      -
performed at moment
```

- or:

-> If this appears in the display the measured values for the zero compensation are not within the permitted tolerances.

```
System in basic setting      60
Compens. not poss.      12.5
```

- Check the zero position with help of "Read measured value block" =>Page 165 , Display group number 004.

1. Interrogate fault memory (Function 02)

2. Erase fault memory (Function 05)

3. End output (Function 06)

4. Switch off ignition.

5. Switch on ignition.

6. Perform zero compensation again.

Protected by copyright. Copyright by Volkswagen AG. Volkswagen AG does not guarantee or accept any liability with respect to the correctness of information in this document. Copyright by Volkswagen AG.
Copyright by Volkswagen AG. Volkswagen AG does not guarantee or accept any liability with respect to the correctness of information in this document. Copyright by Volkswagen AG.
Protected by copyright. Copying for private or commercial purposes, in part or in whole, is not permitted unless authorised by Volkswagen AG.
satelettronica

- Press ⇒ key.

-> Indicated on display:

```
Rapid data transfer      HELP
Enter address word XX
```

- Press keys 0 and 6, this ends the output.

-> Indicated on display

```
Rapid data transfer      Q
06 - End output
```

- ABS and ESP warning lamps light up for approx. 2 seconds.

Display group number 63: Zero compensation of lateral acceleration sensor -G200

◆ All functions that have so far been carried out with V.A.G 1551 can now also be carried out with the tester VAS 5051.

• Position vehicle on a flat level surface.

- Connect fault reader V.A.G 1551 and select (address word 03) "Brake electronics control unit" with ignition switched on => Page 150 .
- Check specifications with help of function 08 "Read measured value block" =>Page 165 , Display group number 004.

• Perform function 11 "Login procedure" successfully first using Fault reader V.A.G 1551 => Page 177

-> Indicated on display:

```
Rapid data transfer      HELP
Enter address word XX
```

- Press keys 0 and 4. (The function "Initiating basic setting" is selected with 04).

-> Indicated on display:

```
Rapid data transfer      Q
04 - Basic setting
```

- Confirm entry with key Q.

-> Indicated on display:

```
Basic setting     HELP
Enter display group number XXX
```

- Press keys 0, 6 and 3
- Confirm entry with key Q.
- ABS warning lamp flashes.

-> And then the display shows e.g.:

```
System in basic setting     63
Compens. OK.     0.6m/s2
```

-> If this display appears the login procedure has not been performed successfully.

```
Function is unknown or cannot be
performed at moment
```

- or:

-> If this appears in the display the measured values for the zero compensation are not within the permitted tolerances.

```
System in basic setting     63
Compens. not poss.     5.0m/s2
```

Copyright by Volkswagen AG. Volkswagen AG does not guarantee or accept any liability with respect to the correctness of information in this document. Copyright by Volkswagen AG. Copying for private or commercial purposes, in part or in whole, is not permitted unless authorised by Volkswagen AG.
satelettronica

- Check specifications with help of function 08 "Read measured value block" =>Page 165 , Display group number 004.

1. Interrogate fault memory (Function 02)

2. Erase fault memory (Function 05)

3. End output (Function 06)

4. Switch off ignition.

5. Switch on ignition.

6. Perform zero compensation again.

- Press ⇒ key.

-> Indicated on display:

```
Rapid data transfer      HELP
Enter address word XX
```

- Press keys 0 and 6, this ends the output.

-> Indicated on display

```
Rapid data transfer      Q
06 - End output
```

- ABS and ESP warning lamps light up for approx. 2 seconds.

Display group number 66: Zero compensation of brake pressure sender 1 -G201- and brake pressure sender 2 -G214

- ◆ All functions that have so far been carried out with V.A.G 1551 can now also be carried out with the tester VAS 5051.

- • Brake pedal not depressed.

- Connect fault reader V.A.G 1551 and select (address word 03) "Brake electronics control unit" with ignition switched on => Page 150 .
- Check measured values with help of function 08 "Read measured value block" =>Page 165 , Display group number 005.

- • Perform function 11 "Login procedure" successfully first using Fault reader V.A.G 1551 => Page 177

-> Indicated on display:

```
Rapid data transfer      HELP
Enter address word XX
```

- Press keys 0 and 4. (The function "Initiating basic setting" is selected with 04).

-> Indicated on display:

```
Rapid data transfer      Q
04 - Basic setting
```

- Confirm entry with key Q.

-> Indicated on display:

```
Basic setting     HELP
Enter display group number XXX
```

- Press keys 0, 6 and 6
- Confirm entry with key Q.

Protected by copyright. Copying for private or commercial purposes, in part or in whole, is not permitted unless authorised by Volkswagen AG. Volkswagen AG does not guarantee or accept any liability with respect to the correctness of information in this document. Copyright by Volkswagen AG.
sateletronica

- ABS warning lamp flashes.

-> And then the display shows e.g.:

```
System in basic setting     66
Compens. OK.      -     0.85bar -
2.12bar
```

-> If this display appears the login procedure has not been performed successfully.

```
Function is unknown or cannot be     -
performed at moment
```

- or:

-> If this appears in the display the measured values for the zero compensation are not within the permitted tolerances.

```
System in basic setting     66
Compens. not poss.          -     10.85bar
-     12.12bar
```

- Check measured values with help of function 08 "Read measured value block" =>Page 165 , Display group number 005.

1. Interrogate fault memory (Function 02)
2. Erase fault memory (Function 05)
3. End output (Function 06)
4. Switch off ignition.
5. Switch on ignition.
6. Perform zero compensation again.

- Press ⇒ key.

-> Indicated on display:

```
Rapid data transfer       HELP
Enter address word XX
```

- Press keys 0 and 6, this ends the output.

-> Indicated on display

```
Rapid data transfer       Q
06 - End output
```

- ABS and ESP warning lamps light up for approx. 2 seconds.

19.13 - Login procedure

◆ All functions that have so far been carried out with V.A.G 1551 can now also be carried out with the tester VAS 5051.

Coding is only possible after the workshop code (WSC) has been entered into V.A.G 1551 or the new tester VAS 5051.

Test sequence

- Connect fault reader V.A.G 1551 and select (address word 03) "Brake electronics control unit" with ignition switched on => Page 150 .

-> Indicated on display:

Protected by copyright. Copying for private or commercial purposes, in part or in whole, is not permitted unless authorised by Volkswagen AG. Volkswagen AG does not guarantee or accept any liability with respect to the correctness of information in this document. Copyright by Volkswagen AG.
satelettronica

```
Rapid data transfer       HELP
Enter address word XX
```

- Press key 1 and 1 (Function "Login procedure" is entered with 11).

-> Indicated on display:

```
Rapid data transfer       Q
11     Login procedure
```

- Confirm entry with key Q.

-> Indicated on display:

```
Login procedure      HELP
Enter code number      40168
```

- Enter code number 40168.
- Confirm entry with key Q.

-> Indicated on display:

```
Rapid data transfer       HELP
Enter address word XX
```

Protected by copyright. Copying for private or commercial purposes, in part or in whole, is not permitted unless authorised by Volkswagen AG. Volkswagen AG does not guarantee or accept any liability with respect to the correctness of information in this document. Copyright by Volkswagen AG.

satelettronica

20 - Electrical check of ABS/EDL/TCS/ESP ITT Mark 20 IE

20.1 - Electrical check of ABS/EDL/TCS/ESP ITT Mark 20 IE

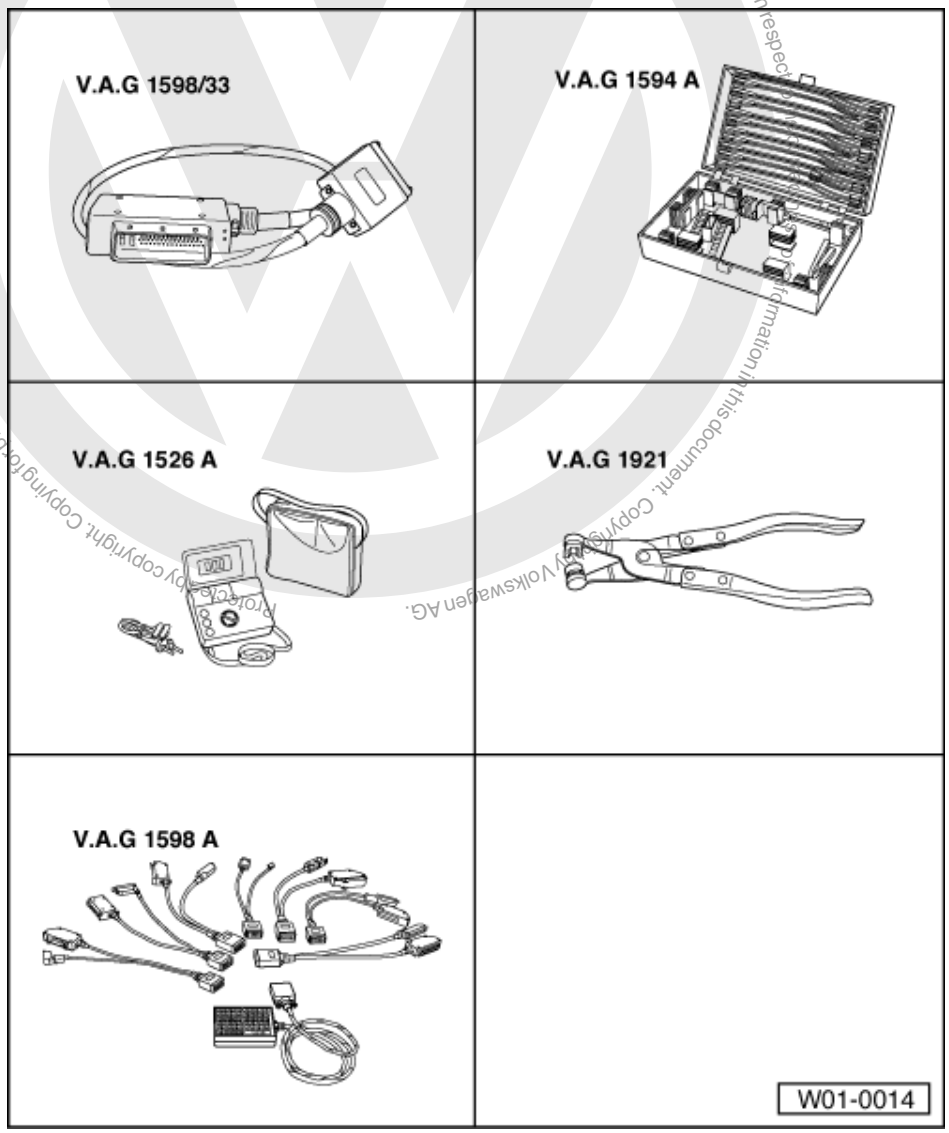

- V.A.G 1598/33 Adapter
- V.A.G 1594 A Adapter set
- V.A.G 1526 A Hand multimeter
- V.A.G 1921 Pliers
- V.A.G 1598 A Test box

The test steps from page 183 are valid only for vehicles with ABS/EDL/TCS/ESP

- For vehicles on which the self diagnosis does not give any indication of the source of the fault. Work through the complete electrical check.
- For vehicles on which the self diagnosis provides a direct indication of the source of the fault. Only carry out the test steps recommended in the fault table (directed entry).

An overview of all the test steps in the electrical check can be found on Page 182 .

20.2 - Test prerequisites

- Switch ignition and electrical consumers off before commencing the check (headlights, lighting, fan ...).

Volkswagen AG. Volkswagen AG does not guarantee or accept any liability with respect to the correctness of information in this document. Copyright by Volkswagen AG. Reproduction, in part or in whole, is not permitted unless authorised by Volkswagen AG. Copying for private or commercial purposes, in part or in whole, is not permitted unless authorised by Volkswagen AG.
satelettronica

- Fuses SB8, SB11, S 178 and S179 must be OK (remove fuses from fuse holder to check).

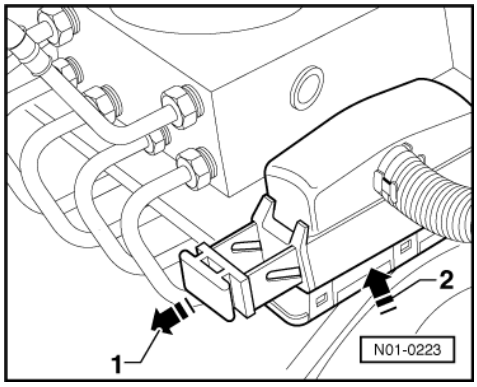

- -> Release control unit -J104- connector -arrow 1- and pull off -arrow 2-.

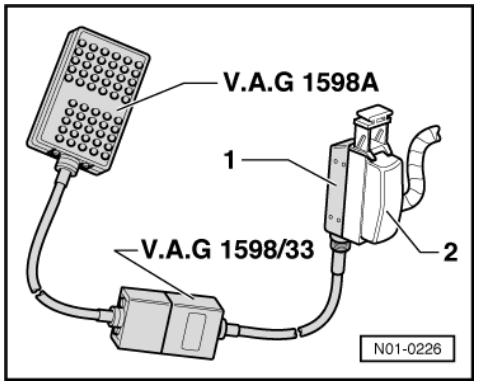

- -> Connect test box V.A.G 1598/33 -1- to multi-pin connector of control unit -J104- -2-.

The specified values are matched to the V.A.G 1526 and are not necessarily applicable for other test units.

20.3 - Multi-pin connector with contact assignment

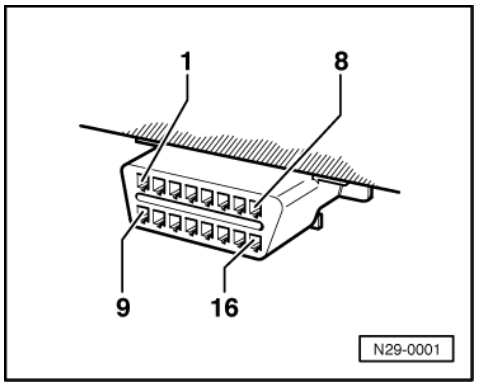

All contacts not listed are currently not assigned and must never be connected to other components!

-> Contact assignment of connectors for voltage supply and self-diagnosis with the fault reader V.A.G 1551

Contact 4	= Earth (terminal 31)
Contact 16	= Positive (terminal 30)

Protected by copyright. Copying for private or commercial purposes, in part or in whole, is not permitted unless authorised by Volkswagen AG. Volkswagen AG does not guarantee or accept any liability with respect to the correctness of information in this document. Copyright by Volkswagen AG.
satelettronica

Contact 7 = K wire to contact 39 of multi-pin connector T47 of control unit -J104

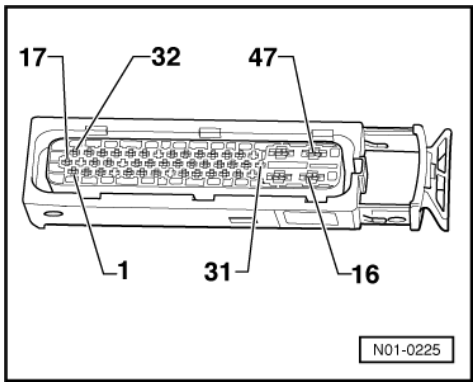

-> Contact assignment of connector T47 wiring harness/control unit -J104

Contact	Wiring connection to component ...
1	=> Brake pressure solenoid -N247
2	=> Coding bridge to contact 30
3	=> Front right speed sensor -G45
4	=> Front right speed sensor -G45
5	=> Vehicles with navigation system only
6	=> Rear right speed sensor -G44
7	=> Rear right speed sensor -G44
8	=> Coding bridge to contact 21
9	=> Lateral acceleration sensor -G200- (earth wire)
10	=> Brake pressure 2 sender -G214
11	=> Yaw rate sender -G202- (earth wire)

Contact	Wiring connection to component ...
12	=> Brake pressure 1 sender -G201
13	=> Brake pressure solenoid trip switch -F84
14	=> Vacant
15	=> Earth point left in engine compartment
16	=> Voltage supply from battery +
17	=> Brake pressure solenoid -N247
18	=> Vacant
19	=> Data BUS wire => Current flow diagrams
20	=> Data BUS wire => Current flow diagrams
21	=> Coding bridge to contact 8
22	=> Activation for ABS warning lamp -K47- and TCS/ESP -K155
23	=> Brake light switch -F
24	=> TCS/ESP button -E256

Contact	Wiring connection to component ...
25	=> Lateral acceleration sensor -G200- (voltage wire)
26	=> Brake pressure sender 2 -G214
27	=> Yaw rate sender -G202- (voltage wire)

Protected by copyright. Copying for private or commercial purposes, in part or in whole, is not permitted unless authorised by Volkswagen AG. Volkswagen AG does not guarantee or accept any liability with respect to the correctness of information in this document. Copyright by Volkswagen AG.
satelitrónica

28	=>	Brake pressure sender 1 -G201
29	=>	Brake pressure solenoid trip switch -F84
30	=>	Coding bridge to contact 2
31	=>	Brake light deactivation relay -J508
32	=>	Brake pressure solenoid trip switch -F84
33	=>	Front left speed sensor -G47
34	=>	Front left speed sensor -G47
71	=>	Vehicles with navigation system only
36	=>	Rear left speed sensor -G46

Contact		Wiring connection to component ...
37	=>	Rear left speed sensor -G46
38	=>	Vacant
39	=>	Connector T16/7, K wire
40	=>	Lateral acceleration sensor -G200- (signal wire)
41	=>	Brake pressure sender 2 -G214
42	=>	Yaw rate sender -G202- (signal wire)
43	=>	Brake pressure sender 1 -G201
44	=>	Voltage supply from ignition/starter switch
45	=>	Vacant
46	=>	Earth point left in engine compartment
47	=>	Voltage supply from battery +

Test step overview

Component to be tested	
Voltage supply for hydraulic pump -V64- to control unit -J104	- Perform test step 1
Voltage supply for valves in hydraulic unit -N55- to control unit -J104	- Perform test step 2
Voltage supply (terminal X) on control unit -J104	- Perform test step 3
Function of brake light switch -F	- Perform test step 4
Resistance of front right speed sensor -G45	- Perform test step 5
Resistance of front left speed sensor -G47	- Perform test step 6
Resistance of rear right speed sensor -G44	- Perform test step 7
Resistance of rear left speed sensor -G46	- Perform test step 8
Voltage signal of front right speed sensor -G45	- Perform test step 9
Voltage signal of front left speed sensor -G47	- Perform test step 10
Voltage signal of rear right speed sensor -G44	- Perform test step 11
Voltage signal of rear left voltage signal -G46	- Perform test step 12
Warning lamp function for ABS -K47	- Perform test step 13
Warning lamp function for brake system -K118	- Perform test step 14

Component to be tested	
Warning lamp function for stability programme -K155	- Perform test step 15
Function of TCS/ESP button -E256	- Perform test step 16
Activation of steering angle sender -G85	- Perform test step 17
Activation of lateral acceleration sensor -G200	- Perform test step 18

Protected by copyright. Copyright by Volkswagen AG. Volkswagen AG does not guarantee or accept any liability with respect to the correctness of information in this document. Copyright by Volkswagen AG.
satelettronica

Component to be tested	
Activation of yaw rate sender -G202	- Perform test step 19
Activation of brake pressure sender 1 -G201	- Perform test step 20
Activation of brake pressure sender 2 -G214	- Perform test step 21
Activation of brake pressure solenoid -N247	- Perform test step 22
Activation of brake pressure solenoid trip switch -F84	- Perform test step 23
Checking data BUS wire	- Perform test step 24
Voltage supply for V.A.G 1551, connector T16	- Perform test step 25
Resistance of K wire for self-diagnosis, connector T16	- Perform test step 26
Coding bridge	- Perform test step 27
Activation of brake light suppression relay -J508	- Perform test step 28

20.4 - Test table (test steps 1 - 16)

Test steps 17 - 28 => see page 190

Notes on test table

- The socket designations of adapter V.A.G 1598/33 are identical to the control unit -J104- contact designations in current flow diagram.

=> Current flow diagrams, Electrical fault finding and Fitting locations binder

- If the readings obtained deviate from the specifications, carry out fault rectification measure in the right-hand part of the table.

=> Current flow diagrams, Electrical fault finding and Fitting locations binder

- Continuity checks with adapter set V.A.G 1594 A (bridging).
- If the measured figures only deviate slightly from the specifications, clean sockets and plugs of the testers and adapter cables (with contact spray G 000 700 04) and repeat check. Before replacing components, check wiring and connections and also, particularly for specifications of less than 10 ω, repeat resistance check on the component.

Switch to measuring range: Voltage measurement (20 V =)					
Test step	V.A.G 1598 sockets	Item tested	▪ Test conditions - Additional operations	Specification	Measures for deviations from specification
1	15 + 47	Voltage supply for hydraulic pump -V64- to control unit -J104	▪ Ignition switched off	10.0 - 14.5 V	- Check wiring using current flow diagram => Current flow diagrams, Electrical fault finding and Fitting locations binder
2	46 + 16	Voltage supply for the valves in hydraulic unit -N55 to control unit -J104	▪ Ignition switched off	10.0 - 14.5 V	- Check wiring using current flow diagram

Protected by copyright. Copyright by Volkswagen AG. Copyright by Volkswagen AG does not guarantee or accept any liability with respect to the correctness of information in this document. Copyright by Volkswagen AG. Protected by copyright. Copyright for private or commercial purposes, in part or in whole, is not permitted unless authorised by Volkswagen AG.
satelettronica

Switch to measuring range: Voltage measurement (20 V =)					
					=> Current flow diagrams, Electrical fault finding and Fitting locations binder

Switch to measuring range: Voltage measurement (20 V =)					
Test step	V.A.G 1598 sockets	Item tested	▪ Test conditions - Additional operations	Specification	Measures for deviations from specification
3	44 + 46	Voltage supply (terminal X) to control unit -J104	▪ Ignition switched on	10.0 - 14.5 V	- Check wiring using current flow diagram => Current flow diagrams, Electrical fault finding and Fitting locations binder
4	23 + 46	Function of brake light switch -F	▪ Ignition switched off ▪ Brake pedal not depressed - Depress brake pedal	0.0 - 0.5 V approx. battery voltage	- Check brake light switch -F- and read measured value block =>Page 165 , Display group number 003 - Adjusting brake light switch => Brake system; Repair group 46; Brake pedal - Assembly overview; Adjusting brake light switch Brake pedal - Assembly overview; Adjusting brake light switch - Check wiring using current flow diagram => Current flow diagrams, Electrical fault finding and Fitting locations binder

Switch to measuring range: Resistance measurement (2 kω)					
Test step	V.A.G 1598 sockets	Item tested	▪ Test conditions - Additional operations	Specification	Measures for deviations from specification
5	3 + 4	Resistance of front right speed sender- G45	▪ Ignition switched off	1.0...1.3 kω	- Disconnect speed sender connection - G45 - Check wiring using current flow diagram - Wiggle wiring during test => Current flow diagrams, Electrical fault finding and Fitting locations binder

Protected by copyright. Copying for private or commercial purposes, in part or in whole, is not permitted unless authorised by Volkswagen AG. Volkswagen AG does not guarantee or accept any liability with respect to the correctness of information in this document. Copyright by Volkswagen AG.
satelettronica

Switch to measuring range: Resistance measurement (2 kω)					
					If no fault can be located in the wiring: - Renew speed sensor -G45 => Brake systems; Repair group 45; Removing and installing parts of ABS system on front and rear axles Removing and installing parts of ABS system on front and rear axles

Switch to measuring range: Resistance measurement (2 kω)					
Test step	V.A.G 1598 sockets	Item tested	▪ Test conditions - Additional operations	Specification	Measures for deviations from specification
6	33 + 34	Resistance of front left speed sensor - G47	▪ Ignition switched off	1.0...1.3 kω	- Disconnect speed sensor connection - G47 - Check wiring using current flow diagram - Wiggle wiring during test => Current flow diagrams, Electrical fault finding and Fitting locations binder If no fault can be located in the wiring: - Renew speed sensor -G47 => Brake systems; Repair group 45; Removing and installing parts of ABS system on front and rear axles Removing and installing parts of ABS system on front and rear axles

Switch to measuring range: Resistance measurement (2 kω)					
Test step	V.A.G 1598 sockets	Item tested	▪ Test conditions - Additional operations	Specification	Measures for deviations from specification
7	7 + 6	Resistance of rear right speed sensor - G44	▪ Ignition switched off	1.0...1.3 kω	- Disconnect speed sensor connection - G44 - Check wiring using current flow diagram - Wiggle wiring during test

Protected by copyright. Volkswagen AG.
Copyright by Volkswagen AG. Volkswagen AG does not guarantee or accept any liability with respect to the correctness of information in this document. Copying for private or commercial purposes, in part or in whole, is not permitted unless authorised by Volkswagen AG.
satelettronica

Switch to measuring range: Resistance measurement (2 kω)					
					=> Current flow diagrams, Electrical fault finding and Fitting locations binder If no fault can be located in the wiring: - Renew speed sensor -G44 => Brake systems; Repair group 45; Removing and installing parts of ABS system on front and rear axles Removing and installing parts of ABS system on front and rear axles

Switch to measuring range: Resistance measurement (2 kω)					
Test step	V.A.G 1598 sockets	Item tested	▪ Test conditions - Additional operations	Specification	Measures for deviations from specification
8	37 + 36	Resistance of rear left speed sensor -G46	▪ Ignition switched off	1.0...1.3 kω	- Disconnect speed sensor connection -G46 - Check wiring using current flow diagram - Wiggle wiring during test => Current flow diagrams, Electrical fault finding and Fitting locations binder If no fault can be located in the wiring: - Renew speed sensor -G46 => Brake systems; Repair group 45; Removing and installing parts of ABS system on front and rear axles Removing and installing parts of ABS system on front and rear axles

Switch to measuring range: Voltage measurement (2 V font=symbol charset=fontspecific code=64 descr='[ap]')					
Test step	V.A.G 1598 sockets	Item tested	▪ Test conditions - Additional operations	Specification	Measures for deviations from specification
9	3 + 4	Front right speed sensor -G45- voltage signal	▪ Vehicle raised ▪ Ignition switched off		- Check installation of speed sensor -G45- and rotor.

Protected by copyright. Copying for private or commercial purposes, in part or in whole, is not permitted unless authorised by Volkswagen AG. Volkswagen AG does not guarantee or accept any liability with respect to the correctness of information in this document. Copyright by Volkswagen AG.

satelettronica

Switch to measuring range: Voltage measurement (2 V font=symbol charset=fontspecific code=64 descr='[ap]')					
			- Rotate front right wheel at approx. 1 rev./sec.	min. 65 mV alternating voltage	- Check whether speed sensor -G45- has been interchanged and Read measured value block =>Page 165 , Display group number 001
10	33 + 34	Front left speed sensor -G47- voltage signal	▪ Vehicle raised ▪ Ignition switched off - Rotate front left wheel at approx. 1 rev./sec.	min. 65 mV alternating voltage	- Check installation of speed sensor -G47- and rotor. - Check whether speed sensor -F47- has been interchanged. =>Read measured value block 165 , display group number 001

Switch to measuring range: Voltage measurement (2 V font=symbol charset=fontspecific code=64 descr='[ap]')					
Test step	V.A.G 1598 sockets	Item tested	▪ Test conditions - Additional operations	Specification	Measures for deviations from specification
11	7 + 6	Rear right speed sensor -G44- voltage signal	▪ Vehicle raised ▪ Ignition switched off - Rotate rear right wheel at approx. 1 rev./sec.	min. 190 mV alternating voltage	- Check installation of speed sensor -G44- and rotor. - Check whether speed sensor has been interchanged and Read measured value block =>Page 165 , Display group number 001
12	37 + 36	Rear left speed sensor -G46- voltage signal	▪ Vehicle raised ▪ Ignition switched off - Rotate rear left wheel at approx. 1 rev./sec.	min. 190 mV alternating voltage	- Check installation of speed sensor -G46- and rotor. - Check whether speed sensor -G46- has been interchanged and Read measured value block =>Page 165 , Display group number 001

Functional check: ABS warning lamp -K47					
Test step	V.A.G 1598 sockets	Item tested	▪ Test conditions - Additional operations	Specification	Measures for deviations from specification

Protected by copyright. Copying for private or commercial purposes, in part or in whole, is not permitted unless authorised by Volkswagen AG. Volkswagen AG does not guarantee or accept any liability with respect to the correctness of information in this document. Copyright by Volkswagen AG.
satelettronica

Functional check: ABS warning lamp -K47					
13	-	Function of ABS warning lamp -K47	▪ Switch ignition on	The warning lamp -K47- lights up for approx. 2 seconds and goes out again	- Check wiring using current flow diagram => Current flow diagrams, Electrical fault finding and Fitting locations binder - Fault in dash panel insert => General body repairs; Repair group 70; Dash panel

Functional check: Brake system warning lamp -K118					
Test step	V.A.G 1598 sockets	Item tested	▪ Test conditions - Additional operations	Specification	Measures for deviations from specification
14	-	Function of brake system warning lamp -K118	▪ Handbrake not applied ▪ Brake fluid level OK. ▪ Switch ignition on - Apply handbrake	Warning lamp -K118- does not light up Warning lamp -K118- lights up	- Check wiring using current flow diagram => Current flow diagrams, Electrical fault finding and Fitting locations binder - Fault in dash panel insert => General body repairs, interior; Repair group 70; Dash panel

Functional check: Stability programme warning lamp -K155					
Test step	V.A.G 1598 sockets	Item tested	▪ Test conditions - Additional operations	Specification	Measures for deviations from specification
15	-	Function of stability programme warning lamp -K155	▪ Switch ignition on	Warning lamp -K155- lights up for 2 seconds and goes out again	- Check wiring using current flow diagram => Current flow diagrams, Electrical fault finding and Fitting locations binder - Fault in dash panel insert

satelettronica
Protected by copyright. Copying for private or commercial purposes, in part or in whole, is not permitted unless authorised by Volkswagen AG. Volkswagen AG does not guarantee or accept any liability with respect to the correctness of information. © Copyright by Volkswagen AG.

					=> General body repairs; Repair group 70; Dash panel

Functional check: TCS/ESP button warning lamp -E256- in test step 16, voltage measurement (20 V =) in test step 16a					
Test step	V.A.G 1598 sockets	Item tested	▪ Test conditions - Additional operations	Specification	Measures for deviations from specification
16	-	Function of TCS/ ESP button -E256-	▪ Ignition switched off. ▪ The function of the stability programme warning lamp -K155- was checked in test step 15. - Operate TCS/ESP button -E256 - Operate TCS/ESP button -E256- again	Warning lamp -K155- lights up for 2 seconds and goes out again TCS/ESP warning lamp -K155- lights up TCS/ESP warning lamp -K155- goes out	
				Test step 16a: Continued on next page.	

Continuation of test step 16a					
Test step	V.A.G 1598 sockets	Item tested	▪ Test conditions - Additional operations	Specification	Measures for deviations from specification
16a	15 + 24	Function of TCS/ ESP button -E256	- Connect test box V.A.G 1598/33 Switch ignition on - TCS/ESP button -E256- depressed and stability programme warning lamp -K155- lights up - TCS/ESP button -E256- not depressed and stability programme warning lamp -K155- lights up	8.0 - 14.5 V 3.5 - 5.0 V	
				Test step 16a: Continued on next page.	

Continuation of test step 16a					
Test step	V.A.G 1598 sockets	Item tested	▪ Test conditions - Additional operations	Specification	Measures for deviations from specification
16a	15 + 24	Function of TCS/ ESP button -E256	- TCS/ESP button -E256- not depressed and stability programme warning lamp -K155- does not light up	0.0 - 1.0 V	- Check wiring using current flow diagram

satelettronica
Protected by copyright. Copying for private or commercial purposes, in part or in whole, is not permitted unless authorised by Volkswagen AG. Volkswagen AG does not guarantee or accept any liability with respect to the correctness of information in this document. Copyright by Volkswagen AG.

			TCS/ESP button -E256- defective		=> Current flow diagrams, Electrical fault finding and Fitting locations binder - Renew TCS/ESP button -E256- => General body repairs; Repair group 70; Dash panel

20.5 - Test table (test steps 17 - 28)

Switch to measuring range: Voltage measurement (20 V =) in test step 17, resistance measurement (200 ω)/(20 M ω)in test step 17a					
Test step	V.A.G 1598 sockets	Item tested	▪ Test conditions - Additional operations	Specification	Measures for deviations from specification
17	-	Voltage supply for steering angle sender -G85	▪ Ignition switched off Disconnect connection from steering angle sender -G85 - Disconnect multi-pin connection T47 from control unit -J104 - Check wiring between contact T6a/4 and connector contact T6a/1 of steering angle sender -G85	10.0 - 14.5 V	- Check wiring using current flow diagram => Current flow diagrams, Electrical fault finding and Fitting locations binder
				Test step 17: Continued on next page.	

Continuation of test step 17					
Test step	V.A.G 1598 sockets	Item tested	▪ Test conditions - Additional operations	Specification	Measures for deviations from specification
17	-	Voltage supply for steering angle sender -G85	- Ignition switched on Check wiring between contact T6a/5 and connector contact T6a/1 of steering angle sender -G85	10.0 - 14.5 V	- Check wiring using current flow diagram => Current flow diagrams, Electrical fault finding and Fitting locations binder
				Test step 17a: On next page.	

Protected by copyright. Copying for private or commercial purposes, in part or in whole, is not permitted unless authorised by Volkswagen AG. Volkswagen AG does not guarantee or accept any liability with respect to the correctness of information in this document. Copyright by Volkswagen AG.
satelettronica

Continuation of test step 17a					
Test step	V.A.G 1598 sockets	Item tested	▪ Test conditions - Additional operations	Specification	Measures for deviations from specification
17a	-	Wiring for steering angle sender -G85	▪ Set to measuring range 200 ω Connect test box V.A.G 1598/33 - Check wiring for open circuit between steering angle sender -G85- and control unit -J104- multi-pin connector	max. 1.5 ω	- Check wiring using current flow diagram => Current flow diagrams, Electrical fault finding and Fitting locations binder
					Test step 17a: On next page.

Continuation of test step 17a					
Test step	V.A.G 1598 sockets	Item tested	▪ Test conditions - Additional operations	Specification	Measures for deviations from specification
17a		Wiring for steering angle sender -G85	▪ Set to measuring range 20 M ω - Remove fuse SB 8 - Check wiring for short circuit to positive or earth	∞ ω	- Check wiring using current flow diagram => Current flow diagrams, Electrical fault finding and Fitting locations binder

Switch to measuring range: Resistance measurement (200 ω/20 M ω)					
Test step	V.A.G 1598 sockets	Item tested	▪ Test conditions - Additional operations	Specification	Measures for deviations from specification
18	-	Wiring for lateral acceleration sensor -G200	▪ Ignition switched off ▪ Set to measuring range 200 ω Disconnect connection from lateral acceleration sensor -G200 - Disconnect multi-pin connection T47 from control unit -J104 - Connect test box V.A.G 1598/33 - Check wiring for open circuit between lateral acceleration sensor -G200- multi-pin connector and control unit -J104- multi-pin connector	max. 1.5 ω	- Check wiring using current flow diagram => Current flow diagrams, Electrical fault finding and Fitting locations binder

Copyright. Copying for private or commercial purposes, in part or whole, is not permitted unless authorised by Volkswagen AG. Volkswagen AG does not guarantee or accept any liability with respect to the correctness of information in this document. Copyright by Volkswagen AG.
satelettronica

Switch to measuring range: Resistance measurement (200 ω/20 M ω)	
	Test step 18: Continued on next page.

Continuation of test step 18					
Test step	V.A.G 1598 sockets	Item tested	▪ Test conditions - Additional operations	Specification	Measures for deviations from specification
			▪ Set to measuring range 20 M ω - Remove fuse SB 8 - Check wiring for short circuit to positive or earth	∞ ω	- Check wiring using current flow diagram => Current flow diagrams, Electrical fault finding and Fitting locations binder

Switch to measuring range: Resistance measurement (200 ω/20 M ω)					
Test step	V.A.G 1598 sockets	Item tested	▪ Test conditions - Additional operations	Specification	Measures for deviations from specification
19	-	Wiring for yaw rate sender -G202	▪ Ignition switched off ▪ Set to measuring range 200 ω Disconnect connection from yaw rate sender -G202 - Disconnect multi-pin connection T47 from control unit -J104 - Connect test box V.A.G 1598/33 - Check wiring for open circuit between yaw rate sender -G202- multi-pin connector and control unit -J104- multi-pin connector	max. 1.5 ω	- Check wiring using current flow diagram => Current flow diagrams, Electrical fault finding and Fitting locations binder
					Test step 19: Continued on next page.

Continuation of test step 19					
Test step	V.A.G 1598 sockets	Item tested	▪ Test conditions - Additional operations	Specification	Measures for deviations from specification
			▪ Set to measuring range 20 M ω - Remove fuse SB 8 - Check wiring for short circuit to positive or earth	∞ ω	- Check wiring using current flow diagram

satelettronica

					=> Current flow diagrams, Electrical fault finding and Fitting locations binder

Switch to measuring range: Resistance measurement (200 ω/20 M ω)					
Test step	V.A.G 1598 sockets	Item tested	▪ Test conditions - Additional operations	Specification	Measures for deviations from specification
20	-	Wiring for brake pressure sender 1 -G201	▪ Ignition switched off ▪ Set to measuring range 200 ω Disconnect connection from brake pressure sender 1 -G201 - Disconnect multi-pin connection T47 from control unit -J104 - Connect test box V.A.G 1598/33 - Check wiring for open circuit between brake pressure sender 1 -G201- multi-pin connector and control unit -J104- multi-pin connector	max. 1.5 ω	- Check wiring using current flow diagram => Current flow diagrams, Electrical fault finding and Fitting locations binder
				Test step 20: Continued on next page.	

Continuation of test step 20					
Test step	V.A.G 1598 sockets	Item tested	▪ Test conditions - Additional operations	Specification	Measures for deviations from specification
			▪ Set to measuring range 20 M ω - Remove fuse SB 8 - Check wiring for short circuit to positive or earth	∞ ω	- Check wiring using current flow diagram => Current flow diagrams, Electrical fault finding and Fitting locations binder

Switch to measuring range: Resistance measurement (200 ω/20 M ω)					
Test step	V.A.G 1598 sockets	Item tested	▪ Test conditions - Additional operations	Specification	Measures for deviations from specification
21	-	Wiring for brake pressure sender 2 -G214	▪ Ignition switched off ▪ Set to measuring range 200 ω Disconnect connection from brake pressure sender 2 -G214 - Disconnect multi-pin connection T47 from control unit -J104		

Copyright by Volkswagen AG. Volkswagen AG does not guarantee or assume any liability with respect to the correctness of information in this copy. Protected by copyright. Copying for private or commercial purposes, in part or in whole, is not permitted unless authorized by Volkswagen AG.
satelettronica

Switch to measuring range: Resistance measurement (200 ω/20 M ω)					
			- Connect test box V.A.G 1598/33 - Check wiring for open circuit between brake pressure sender 2 -G214- multi-pin connector and control unit -J104- multi-pin connector	max. 1.5 ω	- Check wiring using current flow diagram => Current flow diagrams, Electrical fault finding and Fitting locations binder
				Test step 21: Continued on next page.	

Continuation of test step 21					
Test step	V.A.G 1598 sockets	Item tested	▪ Test conditions - Additional operations	Specification	Measures for deviations from specification
			▪ Set to measuring range 20 M ω - Remove fuse SB 8 - Check wiring for short circuit to positive or earth	∞ ω	- Check wiring using current flow diagram => Current flow diagrams, Electrical fault finding and Fitting locations binder

Switch to measuring range: Resistance measurement (200 ω/20 M ω)					
Test step	V.A.G 1598 sockets	Item tested	▪ Test conditions - Additional operations	Specification	Measures for deviations from specification
22	–	Wiring for brake pressure solenoid -N247	▪ Ignition switched off ▪ Set to measuring range 200 ω Separate multi-pin connection T5 on brake servo - Disconnect multi-pin connection T47 from control unit -J104 - Connect test box V.A.G 1598/33 - Check wiring for open circuit between connector T5 for brake pressure solenoid -N247- and control unit -J104- multi-pin connector	max. 1.5 ω	- Check wiring using current flow diagram => Current flow diagrams, Electrical fault finding and Fitting locations binder
				Test step 22: Continued on next page.	

Continuation of test step 22					
Test step	V.A.G 1598 sockets	Item tested	▪ Test conditions - Additional operations	Specification	Measures for deviations from specification

Protected by copyright. Copying for private or commercial purposes, in part or in whole, is not permitted unless authorised by Volkswagen AG. Volkswagen AG does not guarantee or accept any liability with respect to the correctness of information in this document. Copyright by Volkswagen AG.

satelettronica

Continuation of test step 22					
			- Reconnect multi-pin connector T5 on brake servo Separate multi-pin connection T14		
			- Check contacts 7 and 8 to brake pressure solenoid valve -N247- in multi-pin connector T14	1.0...4.0 kω	- Renew brake servo of specifications are not achieved => Brake system; Repair group 47; Removing and installing brake servo Removing and installing brake servo
					Test step 22: Continued on next page.

Continuation of test step 22					
Test step	V.A.G 1598 sockets	Item tested	▪ Test conditions - Additional operations	Specification	Measures for deviations from specification
			▪ Set to measuring range 20 M ω - Remove fuse SB 8 - Check wiring for short circuit to positive or earth	∞ ω	- Check wiring using current flow diagram => Current flow diagrams, Electrical fault finding and Fitting locations binder

Switch to measuring range: Resistance measurement (200 ω/20 M ω)					
Test step	V.A.G 1598 sockets	Item tested	▪ Test conditions - Additional operations	Specification	Measures for deviations from specification
23	-	Wiring for brake pressure solenoid trip switch -F84	▪ Ignition switched off ▪ Set to measuring range 200 ω Disconnect multi-pin connection T5 on brake servo - Disconnect multi-pin connection T47 from control unit -J104 - Connect test box V.A.G 1598/33 - Check wiring for open circuit between multi-pin connector T5 for brake pressure solenoid trip switch -F84- and control unit -J104- multi-pin connector	max. 1.5 ω	- Check wiring using current flow diagram => Current flow diagrams, Electrical fault finding and Fitting locations binder
					Test step 23: Continued on next page.

Protected by copyright. Copying for private or commercial purposes, in part or in whole, is not permitted unless authorised by Volkswagen AG. Volkswagen AG does not guarantee or assume any liability with respect to the correctness of information in this document. Copyright by Volkswagen AG.
satelettronica

Continuation of test step 23					
Test step	V.A.G 1598 sockets	Item tested	▪ Test conditions - Additional operations	Specification	Measures for deviations from specification
			▪ Set to measuring range 20 M ω - Remove fuse SB 8 - Check wiring for short circuit to positive or earth	∞ ω	- Check wiring using current flow diagram => Current flow diagrams, Electrical fault finding and Fitting locations binder

Switch to measuring range: Resistance measurement (200 ω/20 M ω)					
Test step	V.A.G 1598 sockets	Item tested	▪ Test conditions - Additional operations	Specification	Measures for deviations from specification
24	19 or 20	Data bus wiring	▪ Ignition switched off ▪ Set to measuring range 200 ω - Disconnect multi-pin connection from a control unit which is connected via data bus wiring: - Connect test box V.A.G 1598/33 - Check data bus wiring for open circuit	max. 1.5 ω	- Check wiring using current flow diagram => Current flow diagrams, Electrical fault finding and Fitting locations binder
					Test step 24: Continued on next page

Continuation of test step 24					
Test step	V.A.G 1598 sockets	Item tested	▪ Test conditions - Additional operations	Specification	Measures for deviations from specification
			▪ Set to measuring range 20 M ω - Remove fuse SB 8 - Check wiring for short circuit to positive or earth	∞ ω	- Check wiring using current flow diagram => Current flow diagrams, Electrical fault finding and Fitting locations binder

Switch to measuring range: Voltage measurement (20 V =)					
Test step	V.A.G 1598 sockets	Item tested	▪ Test conditions - Additional operations	Specification	Measures for deviations from specification

Copyright by Volkswagen AG. Protected by copyright. Copying for commercial purposes, in part or in whole, is not permitted unless authorised by Volkswagen AG. Volkswagen AG does not guarantee or accept any liability with respect to the correctness of information in this document.
satelettronica

Switch to measuring range: Voltage measurement (20 V =)					
25	-	Voltage supply for V.A.G 1551, connector T161)	▪ Ignition switched off Connect multimeter V.A.G 1526 to connector T161)using adapter set V.A.G 1594	10.0 -14.5 V	- Check wiring using current flow diagram => Current flow diagrams, Electrical fault finding and Fitting locations binder

1) Diagnosis connection contact assignment =>Page 180

Switch to measuring range: Resistance measurement 200 ω					
Test step	V.A.G 1598 sockets	Item tested	▪ Test conditions - Additional operations	Specification	Measures for deviations from specification
26	-	Resistance of K wire for V.A.G 1551, connector T161)	▪ Ignition switched off Disconnect multi-pin connection from control unit -J104 - Connect test box V.A.G 1598/33 - Connect multimeter V.A.G 1526 to contacts T16/71) and T47/39 of multi-pin connectors from control unit -J104- using cables from adapter set V.A.G 1594	max. 1.5 ω	- Check wiring using current flow diagram => Current flow diagrams, Electrical fault finding and Fitting locations binder

1) Diagnosis connection contact assignment =>Page 180

Switch to measuring range: Resistance measurement (200 ω)					
Test step	V.A.G 1598 sockets	Item tested	▪ Test conditions - Additional operations	Specification	Measures for deviations from specification
27	2 + 30	Coding bridge	▪ Ignition switched off	0.0 -1.0 ω	
	8 + 21	Coding bridge	▪ Ignition switched off	0.0 -1.0 ω	- Check wiring using current flow diagram => Current flow diagrams, Electrical fault finding and Fitting locations binder

satelettronica

Switch to measuring range: Voltage measurement (20 V =)					
Test step	V.A.G 1598 sockets	Item tested	▪ Test conditions - Additional operations	Specification	Measures for deviations from specification
28	-	Voltage supply for brake light suppression relay -J508	▪ Ignition switched off Pull brake light suppression relay -J508- off additional relay carrier - Check wire between contact 6/85 on additional relay carrier of deactivating brake light relay -J508- and vehicle earth	10.0 - 14.5 V	- Check wiring using current flow diagram => Current flow diagrams, Electrical fault finding and Fitting locations binder
					Test step 28: Continued on next page.

Continuation of test step 28					
Test step	V.A.G 1598 sockets	Item tested	▪ Test conditions - Additional operations	Specification	Measures for deviations from specification
28			▪ Ignition switched off ▪ Brake pedal not depressed - Check wire between contact 2/30 on additional relay carrier of brake light suppression relay -J508- and vehicle earth	0.0 - 0.5 V	- Read measured value block =>Page 165 , Display group number 003
			▪ Depress brake pedal	approx. battery voltage	- Adjusting brake light switch => Brake system; Repair group 46; Brake pedal - Assembly overview; Adjusting brake light switch Check wiring using current flow diagram => Current flow diagrams, Electrical fault finding and Fitting locations binder
					Test step 28a: Continued on next page.

Protected by copyright. Copying for private or commercial purposes, in part or in whole, is not permitted unless authorised by Volkswagen AG. Volkswagen AG does not guarantee or accept any liability with respect to the correctness of information in this document. Copyright by Volkswagen AG.
satelettronica

Switch to measuring range: Resistance measurement (200 ω/20 M ω)					
Test step	V.A.G 1598 sockets	Item tested	▪ Test conditions - Additional operations	Specification	Measures for deviations from specification
28a	-	Wiring for brake light suppression relay -J508	▪ Ignition switched off ▪ Set to measuring range 200 ω Pull brake light suppression relay -J508 off additional relay carrier - Disconnect multi-pin connection T47 from control unit -J104 - Connect test box V.A.G 1598/33 - Check wiring for open circuit between additional relay carrier of brake light suppression relay -J508 and multi-pin connector of control unit -J104:	max. 1.5 ω	- Check wiring using current flow diagram => Current flow diagrams, Electrical fault finding and Fitting locations binder
				Test step 28a: Continued on next page.	

Continuation of test step 28a					
Switch to measuring range: Resistance measurement (200 ω/20 M ω)					
Test step	V.A.G 1598 sockets	Item tested	▪ Test conditions - Additional operations	Specification	Measures for deviations from specification
28a			▪ Set to measuring range 20 M ω - Remove fuse SB 8 - Check wiring for short circuit to positive or earth	∞ ω	- Check wiring using current flow diagram => Current flow diagrams, Electrical fault finding and Fitting locations binder

21 - Definitions

21.1 - Definitions

These explanations refer only to this assembly group: Self-diagnosis for ABS. These definitions are not necessarily generally valid.

ABS

Anti-locking brake system. Further information on the ABS can be found in the relevant self-study programmes.

Protected by copyright. Copying for private or commercial purposes, in part or in whole, is not permitted unless authorised by Volkswagen AG. Volkswagen AG does not guarantee or accept any liability with respect to the correctness of information in this document. Copyright by Volkswagen AG.
satelettronica

Display group number => Read measured value block

TCS

Traction control system

Data bus

Transportation of data. To do this the electrical signals are brought into a certain format (BUS). Further information on this can be found in Self-study programme No.180 and186.

Data bus low (high)

The voltage used to transport the data is low (high). Further information on this can be found in self-study programme no. 186.

Speed sensor

Sends speed signals to control unit.

EBD

Electronic brake pressure distribution

EDL

Electronic differential lock

Self-diagnosis

The capability of the control unit:

- recognise faults,
- react to faults,
- store faults,

to register faults and make them available in the read measured value block. Further information on this can be found in Self-study programme No.180 and test unit instruction manual.

Performing self-diagnosis

Connecting the fault reader to be able to interrogate the fault memory. Further information on this can be found in Self-study programme No.180 and test unit instruction manual.

Performing electrical check

A targeted check of the electronic components by performing certain measurements.

ESP

Electronic stability programme

No communication

There is no connection for exchanging information between the control units. Further information on this can be found in Self-study programme No. 180.

Yaw rate sender -G202

Recognises the rotational movement of the vehicle along its vertical axis in relation to vehicle speed.

Protected by copyright. Copying for private or commercial purposes, in part or in whole, is not permitted unless authorised by Volkswagen AG. Volkswagen AG does not guarantee or accept any liability with respect to the correctness of information in this document. Copyright by Volkswagen AG.

satelettronica

Steering angle sender -G85

Registers the course and direction driver wishes to take. Data transfer to control unit is via data bus wiring.

Short to earth

Current flows -incorrectly- to earth without supplying a consumer.

Short to positive

Current flows -incorrectly- to a live component without supplying a consumer.

Brake pressure solenoid trip switch -F84

The trip switch is installed in the brake servo and is required by the control unit to recognise the braking desired by the driver.

Brake pressure solenoid -N247

The brake pressure solenoid is installed in the brake servo and ensures that a pre-pressure of 10 bar is available for the ABS/ESP pump.

Read measured value block

The control unit can transfer a considerable amount of test data. This test data delivers information on the operational condition of the system and/or sensors connected to it. In many cases the transferred test data supports fault finding and fault rectification. The test data has been summarized into single display groups because all the information cannot be evaluated at the same time. The information can be selected via display group numbers.

EBC

Engine braking control

Lateral acceleration sender -G200

The lateral acceleration sender is used to register the speed through curves/bends in the road and decides which side of the vehicle the ESP is to brake.

Brake pressure sender -G201-/-G214

Recognises the pressure exerted by the driver and is required to control the pressure of the pre-pressure system.

Programme card version

Always use the most up-to-date programme card. Further information can be found in the test unit operating instructions.

Sporadic

Happens occasionally

Infinity ω

The resistance is infinite, open circuit.

ω = Ohm

Copyright by Volkswagen AG. Volkswagen AG does not guarantee or accept any liability with respect to the correctness of information in this document. Copying for private or commercial purposes, in part or in whole, is not permitted unless authorised by Volkswagen AG. Protected by copyright.
satelettronica